Smart Grid Networks System Requirements Specification

Release Version 5

Final

Table of Contents

Document History

Revision History

Revision Number	Revision Date	Revision By	Summary of Changes	Changes marked
9	11/29/12	MKG	Moved sections from the appendix that belonged in the normative text and re-formatted the content in section 7 to read like the rest of the document	yes

1 Authors

The following individuals and their companies are members of the OpenSG SG-Network Task Force Core Development Team and contributed substantially to the drafting of the SG-Network System Requirement Specification:

Jerry Armes, Micronet Communications
Vincent Bemmel, Trilliant
Andrew Bordine, Consumers Energy
John Buffington, Itron
George Cosio, Florida Power & Light, Co.
Ron Cunningham, American Electric Power
Paul Duffy, Cisco Systems
Kelly Flowers, Detroit Edison
Matt Gillmore, Consumers Energy / Itron
Tim Godfrey, EPRI
Bill Godwin, Progress Energy
Bill Leslie, Longboard Technologies
Claudio Lima, Sonoma Innovations
Michael Northern, Deloitte Consulting LLP
David Pilon, Detroit Edison
Gary Stuebing, Duke Energy
Don Sturek, Pacific Gas & Electric
David De Yagher – BC Hydro
Cheong Siew – BC Hydro
Ed Eckert - Itron
Klaus Bender - UTC
Kory Fifield – Sensus
Mike Rodgers - Capgemini

1.1 Acknowledgements

The content delivered by the SG-Network task force would not be possible without feedback and consensus from the overall industry. Listed below are individuals who have provided substantial feedback and guidance to SG-Network.

David Cypher, NIST
Nada Golmie, NIST
Erich Gunther, Enernex
Pat Kinney, Kinney Consulting
Mark Kleerer, Qualcomm
Bruce Kraemer, Marvell
Wayne Longcore, Consumers Energy
Geoff Mulligan, IPSO Alliance
Robby Simpson, GE Energy
Phil Slack, Florida Power & Light, Co.

2 Executive Summary

This document has been created in order to identify, articulate and document non-functional requirements for telecommunications within the Smart Grid. While most of the major use cases for Smart Grid and Advanced Metering Infrastructure are well known, the industry lacked a set of documentation that specified from business operations point of view critical aspects of these use cases such as: How Often, Reliability, Latency, etc. The goal of this document is to provide an operational perspective for how utilities and other Smart Grid entities could use technology in the Smart Grid to solve business problems.

The editors of this document took care as much as possible to provide a perspective that is technology agnostic.

2.1 Intended Audience

This document has been written for a wide range of audiences including:

- Academia in order for the business functions of Smart Grid to be understood
- Vendors for consideration as a Market Requirements Document
- Utilities for considerations with procurement, and engineering analysis
- Industry alliances including: Grid Wise Architecture Council, Smart Grid Interoperability Panel, IEEE, IETF, etc

2.2 Background

This document was created by the SG-Network task force. The SG-Network task force is a group formed within the Utility Communication Association's international user group (UCAiug) under the Open Smart Grid (OpenSG) technical committee. The SG-Network task force chair is Matthew Gillmore and the vice chair is Ronald Cunningham.

2.2.1 History

The SG-Network Task force had originally started from a group called AMI-Net within the UCAiug in 2008 and was originally focused on management requirements for Advanced Metering Infrastructure systems. With the formation of the SGIP's Priority Action Plan 1 (Internet Protocol for Smart Grid) and Priority Action Plan 2 (Wireless Communications for Smart Grid) and a growing need for a set of non-functional requirements for Smart Grid. The AMI-Net task force re-chartered and changed the task force name to SG-Network to meet these needs.

3 Deliverables and Artifacts

The SG-Network task force has worked to create the following Artifacts

- System Requirements Specification (This document)
- Non-Functional and Functional Requirements spreadsheet
- Illustrative Reference Architecture

NOTE: The above Artifacts have a major and minor revision number associated with them respectively. The current version is 5 and the minor revision may vary within the artifacts.

3.1 System Requirements Specification

The system requirements specification (SRS) document was written to explain all of the SG-Network task force artifacts, provide information about how they were created and how to use them. This document also provides narratives, descriptions and rational for the documented use case scenarios.

3.2 Non-Functional and Functional Requirements spreadsheet

The process of requirements gathering and documentation has been evolutionary in nature as various combinations of additional attributes are documented; use cases added; payload requirement sets added; and alternative communication paths documented. The SG Network task force has defined ~7875 (as of release 5.0) functional and volumetric detailed requirements rows in the Requirements Table representing 204 different payloads for 19 use cases.

For background information, the following link is provided on how requirements are derived:

http://osgug.ucaiug.org/UtiliComm/Shared%20Documents/Latest_Release_Deliverables/rqmts-documentation-instructions-r1.4.pdf

The requirements spreadsheet has file name syntax of "rqmts-documentation-instructions-rN.R.doc", where N represents the version number and R represents the revision number and is located at:
http://osgug.ucaiug.org/UtiliComm/Shared%20Documents/Latest_Release_Deliverables/

Within the spreadsheet, the following sheets are of interest.

- "Reqmts-Combined" Contains all of the requirements and pertinent volumetric information (e.g. how often, latency, etc)
- "Payload_attrib_LIC-CIA-rtnl" Contains information for the payloads identified within the "Reqmnts-Combined" worksheet
- "HowOften-abbrev-xref" Contains helpful information on the abbreviations found within the How Often column
- "payload-mtr-splits" Contains mapping information for applicable payloads to electric, water and gas meters
- "payload-usecase-row-cnt" Allows users to see what payloads are sent for specific use cases.

To effectively use the business functional and volumetric requirements, the consumer of the Requirements Table must:

- select which use cases and payloads are to be included (e.g. Meter Reading, DRLC, etc)
- select the high level architecture to be used for information flows between actors
- specify the size (quantity and type of devices) of the smart grid deployment (e.g. number of electric meters, feeder line devices, etc)
- tailor specific volumetric requirements to your specific analysis

The current Requirements Table as a spreadsheet is not very conducive to performing these tasks. SG-Network task force is building a database that is synchronized with the latest release of the Requirements Table (spreadsheet). SG Network task force will be adding capabilities to the database to solicit answers to the questions summarized above,

query the database, and format & aggregate the query results for either reporting or exporting for use by other tools.

The current SG-Network task force Requirements Database and related use documentation are located at:

- http://osgug.ucaiug.org/UtiliComm/Shared%20Documents/Latest_Release_Deliverables/Rqmts_Database/

3.2.1 Important Requirements Spreadsheet Column Descriptions

The following Table describes each of the columns within the "Reqmnts-Combined" worksheet.

Column Title	Description
Rqmt Ref	A reference to the original worksheet line number the requirement originally defined
Row Type	Indicates whether the requirement row is the parent row for the specific payload or a child requirement row of that specific payload requirement set. Parent "P" rows are end to end that is original actor and destination actor of a documented use case scenario
Data-Flow Ref	A reference to the architectural reference models lines (data flows or interfaces) between actors shown illustratively in this document and attached to this work as a separate file
Data Flow From Actor	Indicates the actor that is considered the sender of information noted in the Requirements Column
Data Flow to Actor	Indicates the actor that is considered the desired recipient of the information noted in the Requirements Column
Requirements	The actual application requirement. Words like "shall" in this column are to be considered required, while words like "may" should be considered optional
Payload Name	Explains the scenario type of the requirement derived from the use case. (e.g. Bulk, On Demand for meter reading)
Payload Type	Indicates the category of the application payload
Daily Clock Periods of Primary Occurrence	One or multiple periods of the day that the majority of the specific payload occurs
How Often	Describes the quantity and frequency of the specific application payload as it moves between the stated actors across the interface (data flow) that this requirement row addresses
Reliability	The probability that an operation will complete without failure over a specific period or amount of time
Latency	Summation of actor (including network nodes) processing time and network transport time measured from an actor sending or forwarding a payload to an actor, and that actor processing (or consuming) the payload. Refer to the Business Application Latency Section for more information
App Payload Size	An estimation of how many bytes are needed for the requirement as actual application payload exclusive of any added security, or network, or protocol overheads
Payload Name	This syncs with the Payload Name in the Reqmts-Combined worksheet
Payload Type	This syncs with the Payload Type in the Reqmts-Combined worksheet
Payload Description	Explanation of what is the application payload use and intent
Payload Attributes	The data elements that are included in the application payload. This excludes any additional security and/or telecommunication protocol(s) added data elements around the application payload
Security LICs - NISTIR 7628	Logical Interface Category (LIC) derived and mapped (as closely as possible to typically no more than 2-3 LICs) from the NISTIR 7628 document volume 1, section 2.3 "Table 2.2 Logical Interfaces by Category" and remaining sections 2.3.x to the application payload
Payload C-I-A Risk Values	Confidentiality, Integrity, Availability security risk levels as described in NISTIR 7628 document volume 1, section 3.2 "Table 3-1 Impact Levels Definitions" and assigned based on the application payload's description, attributes, C-I-A rationale excluding other security or telecomm network protocol(s) overhead data elements
Security C-I-A Risk Values Rationale	Documents the business impacts of the payload being compromised as assessed against the security confidentiality, integrity, availability areas

3.2.2 SG Network Task Force Business Application Payload Latency Definition/Description

From the "rqmts-documentation-instructions-r1.4.doc" document that is included in the Requirements Release 5.1 documentation, the business application payload latency from source (From) actor to destination (To) actor is defined as:

> *"Latency – Summation of actor (including network nodes) processing time and network transport time measured from an actor sending or forwarding a payload to an actor, and that actor processing (or consuming) the payload. Syntax (also refer to the Telec Telecommunicationsommunications Path Options Discussion Diagram), the parent's value must be equal or greater than:*
>
> - *any communication path scenarios for the parent's stated from actor and to actor*
> - *and must be mathematically consistent with the highest summation of children latencies specific to any communication path scenario"*

The graphic below illustrates the definition of latency applied to the On-Demand Meter Reading Use Case Scenario.

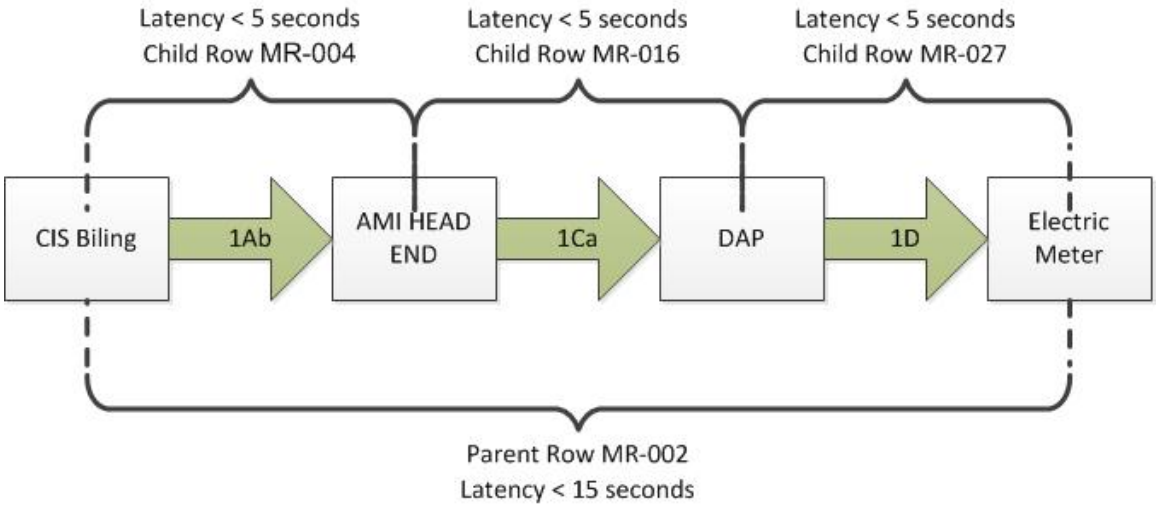

[(1Aa + 1B) or ***1Ab***] + [***1Ca*** or (1Cba + 1Cb) or (1Cba + 1Cc)] + ***1D***

3.2.3 How to interpret latency within SG-Networks requirements

The "Row Type" column in the requirements spreadsheet has two types of values. These values are Parent "p" and Child "c". Parent rows contain the overarching source (From) actor and the destination (To) actor latency requirements. Child rows contain intermediary source and destination routes a system uses to ensure the Parent row requirement is met.

3.2.3.1 Parent row requirements

1) The parent row shall only contain the overarching source and destination actors.
2) The payload defined in the parent row shall be delivered and processed within the defined latency of said row.
3) The defined application payload latency shall include application, transport, network, and security layer overhead.

3.2.3.2 Parent & Child row information and considerations

1) Parent payload requirements do not consider latency from a user interface to that originating payload **From** actor. Consequently, there may be additional business application payload latency that needs to be considered for the end-to-end payload flow that includes the user interface. With remote user access to applications and systems, this additional business application payload latency may be significant to the analysis. The example below shows how this relationship works with and On-Demand Meter Reading Use Case Scenario.

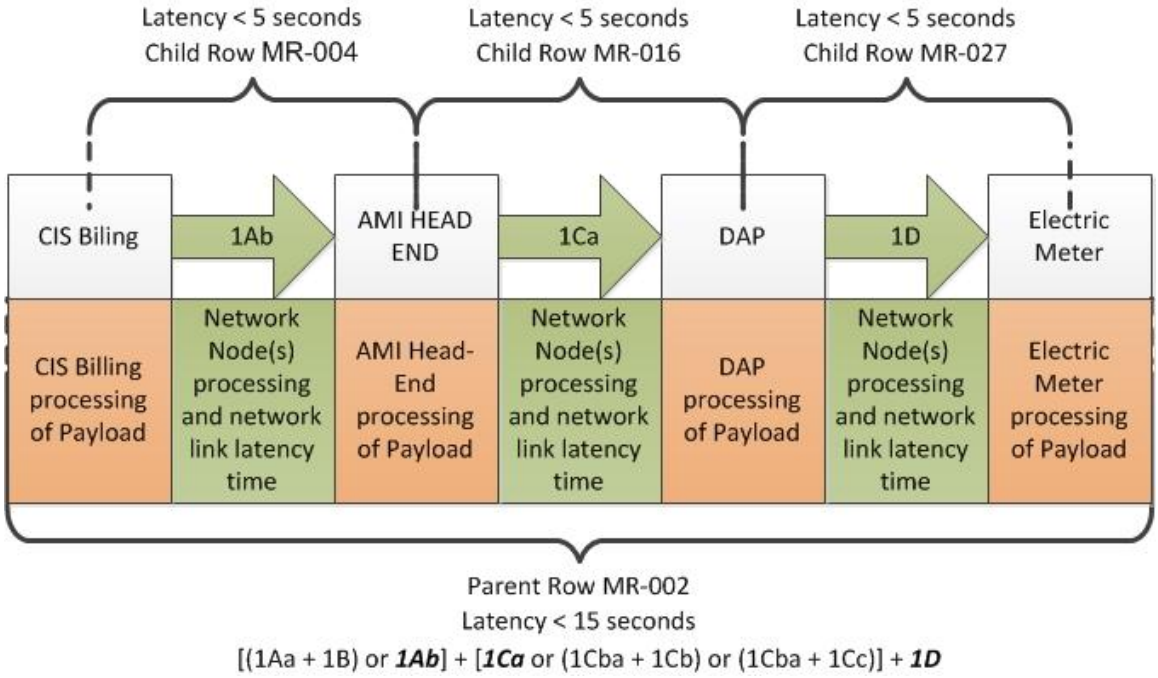

2) The Parent rows are primarily used to filter, parse and scale the SG Network Requirements for follow-on analysis purposes

3) SG Network Requirements Table rows contain only named actors, which are not to be confused with "network nodes". Network nodes in the definition text above refers to any network clouds technology specific gear required or needed to move the payload from the “from” actor to a “to” actor of the “From-To” actor pair.

4) Child rows between the DAP and the meters whether they are electric, water or gas are technology agnostic. Regardless if the network topology is point to multipoint or mesh, the Child row latency applies. Below is an example that shows how this relationship works with and On-Demand Meter Reading Use Case Scenario.

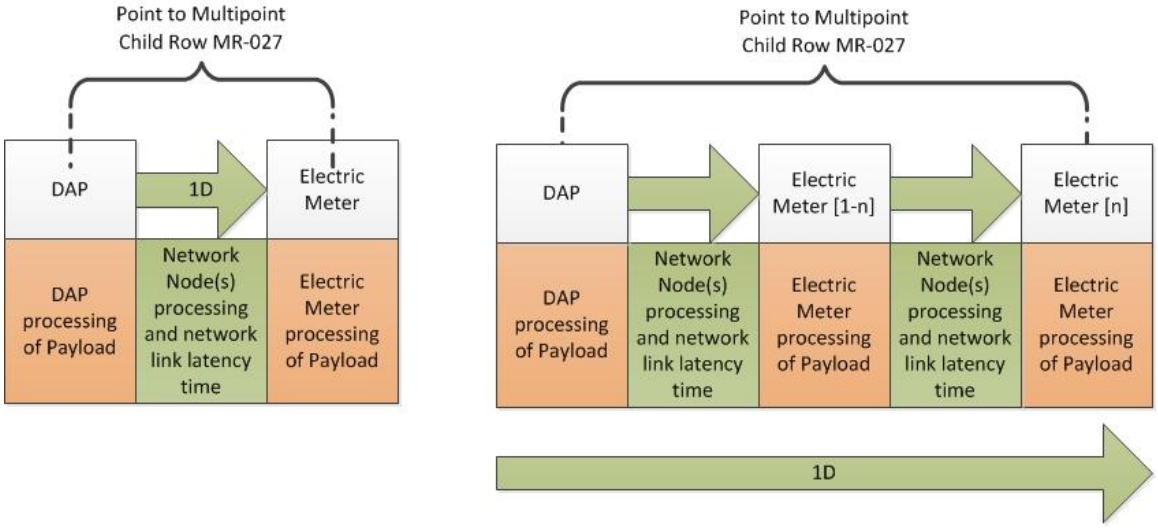

5) Latency requirements are a combination of network communication and actor processing time. If an actor requires more time than defined in this set of requirements to process a payload, this should be factored into the analysis.

6) The business application payload latencies are always expressed in the documentation as less than ("<") amounts. This was done to show the longest latency duration allowed. An implementation should consider exceeding these requirements expectations as points of market differentiation.

3.3 Illustrative Reference Architecture Overview

In order to help the reader of this document to understand the content of the SG-Network requirements, the SG-Network task force created illustrative reference architecture documents. These documents can consumed in Visio™ or PDF™ format. The Visio format uses a layers concept for use cases. These files are also available for reference at the following locations:

The reference model diagrams locations are in the SG-Network TF webpage folder:
http://osgug.ucaiug.org/UtiliComm/Shared%20Documents/Latest_Release_Deliverables/Diagrams

The SG-Network functional requirements table location is:
http://osgug.ucaiug.org/UtiliComm/Shared%20Documents/Latest_Release_Deliverables

On the next page, an example of the Illustrative Reference Architecture is shown with an interface view of actors within their respective domains.

Smart Grid Conceptual Actors / Data Flow Diagram – Cross Domain Network Focused – OpenSG / SG-Network TF

Illustrative

DRAFT 14Feb2012
Base – file SG-NET-diagram-r5.1.vsd
page size: ANSI-D

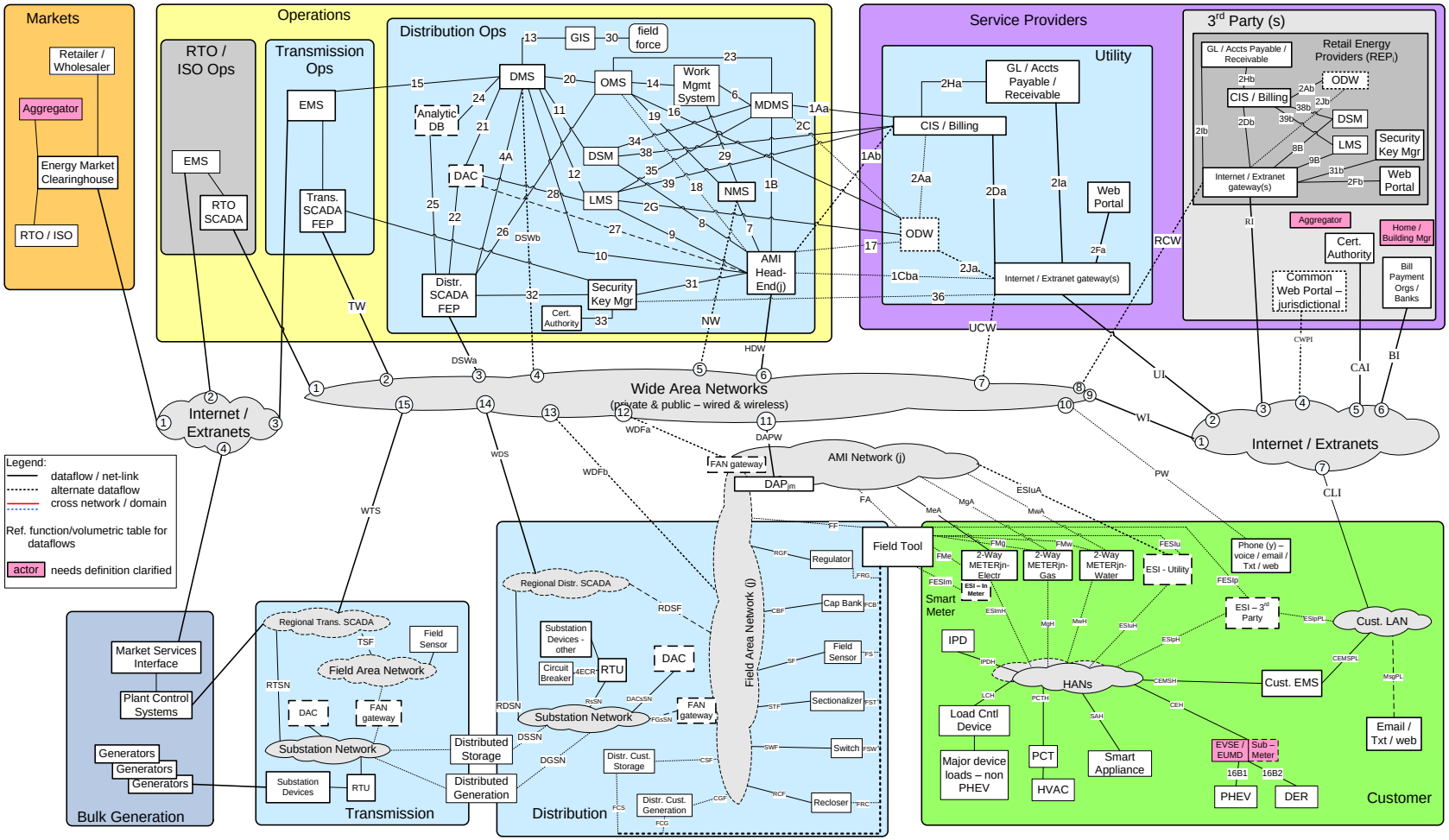

352
353
354

Smart Grid Conceptual Actors / Data Flow Diagram – Cross Domain Network Focused – OpenSG / SG-Network TF

DRAFT 14Feb2012
Base – file SG-NET-diagram-r5.1.vsd
page size: ANSI-D

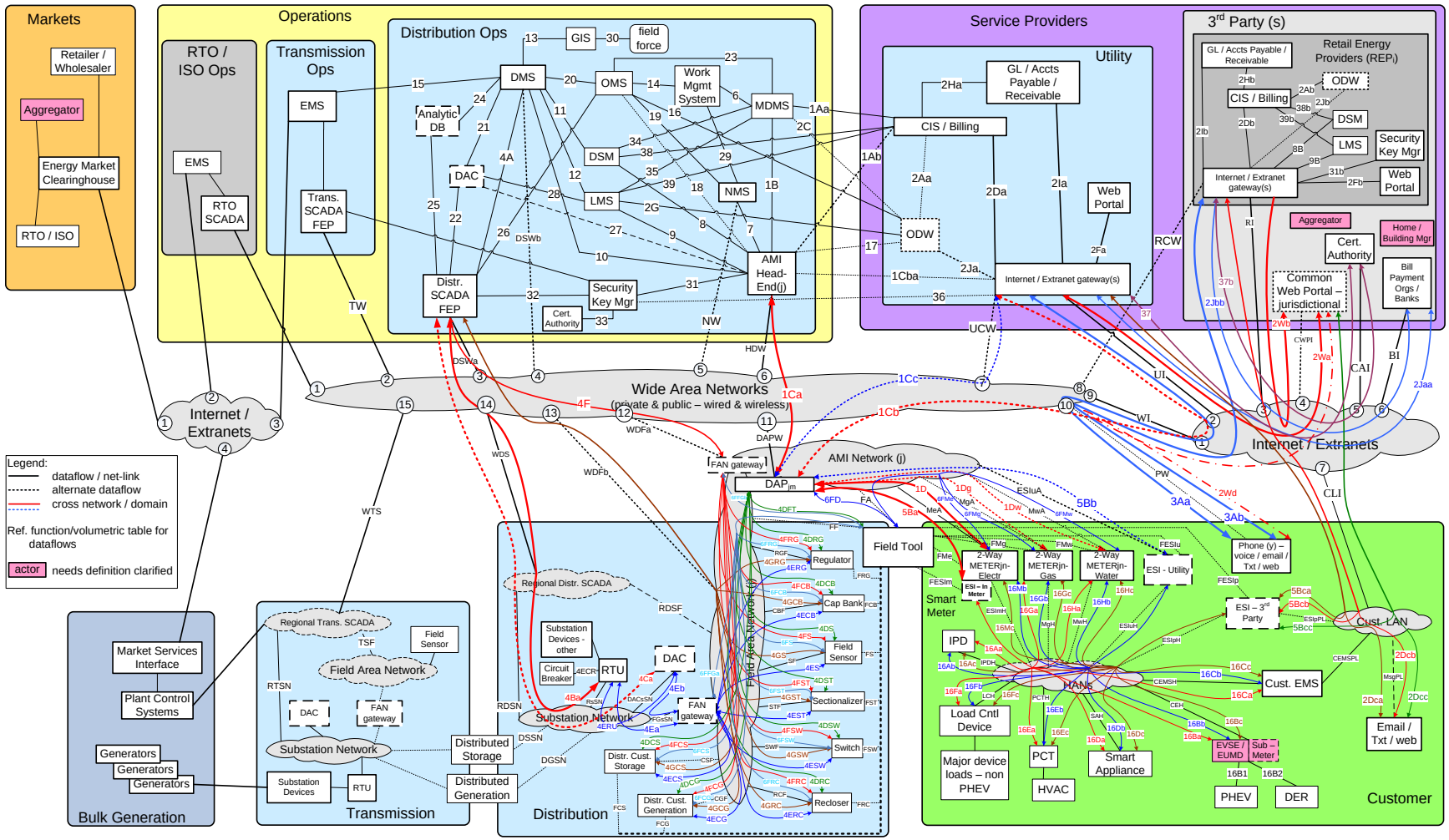

Figure 1 - Baseline Diagram with Cross Domain & Network flows

3.4 Alternative / Multiple Telecommunications Paths

Referring to the Reference Diagram with multiple data communication paths, how do we select which ones are appropriate and applicable to the deployment being studied or modeled? If one focuses on a very simplistic example of the CIS/Billing – Utility to 2Way-Meter data, two telecommunications path options and one deployment decision need to be made: (refer to following diagram). Note that this example does not contain all of the communication paths possible between the CIS/Billing – Utility to 2Way-Meter. For the full set of communication path options and decisions, refer to the Deployment Profile section in this document.

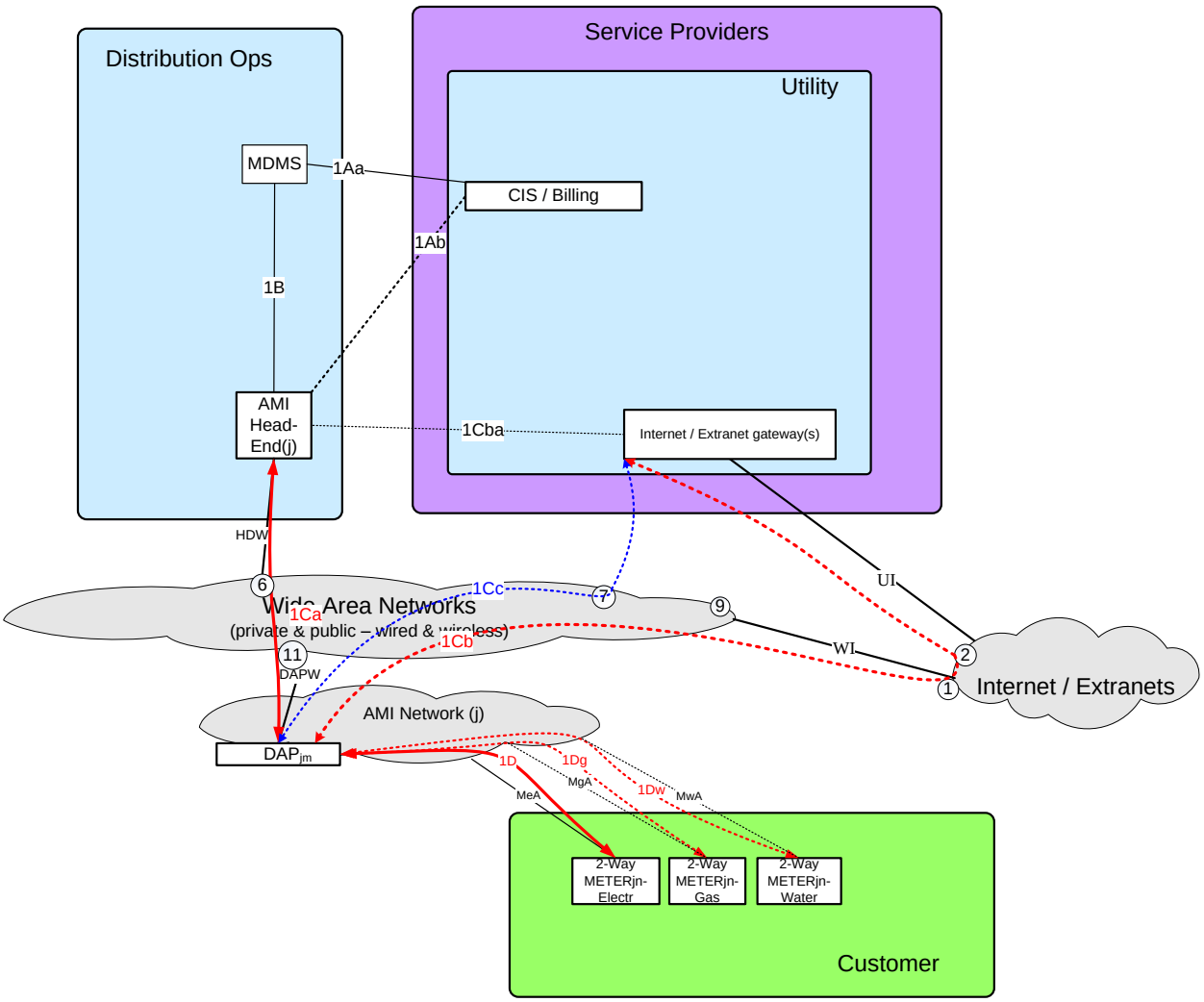

Figure 2 - Alternative / Multiple Telecommunications Paths - Reference Diagram

Four different ways of documenting these communication path options and deployment decisions are presented in this document:

1. Graphical Parsing of the Unique From / To Actor Pairing
2. Payload Requirement Set Data Flow Ref Pseudo Code
3. Communication Path and Deployment Decisions Graphical Pseudo Code
4. Deployment Profiles - Unique Deployment Decisions and Selected Comm-Paths

3.4.1 Graphical Parsing of the Unique From / To Actor Pairing

This approach documents all the unique combinations of traversing the available communication paths from one end of a payload requirement set's from/to actor pairing to the other end point actor, using the Reference Diagram as the baseline. The following figure illustrates this process for a very simplistic example of the CIS / Billing – Utility telecommunications paths with the 2Way-Meter actors, but excludes for brevity purposes, playing out the deployment decision of which 2Way-Meters are in-scope.

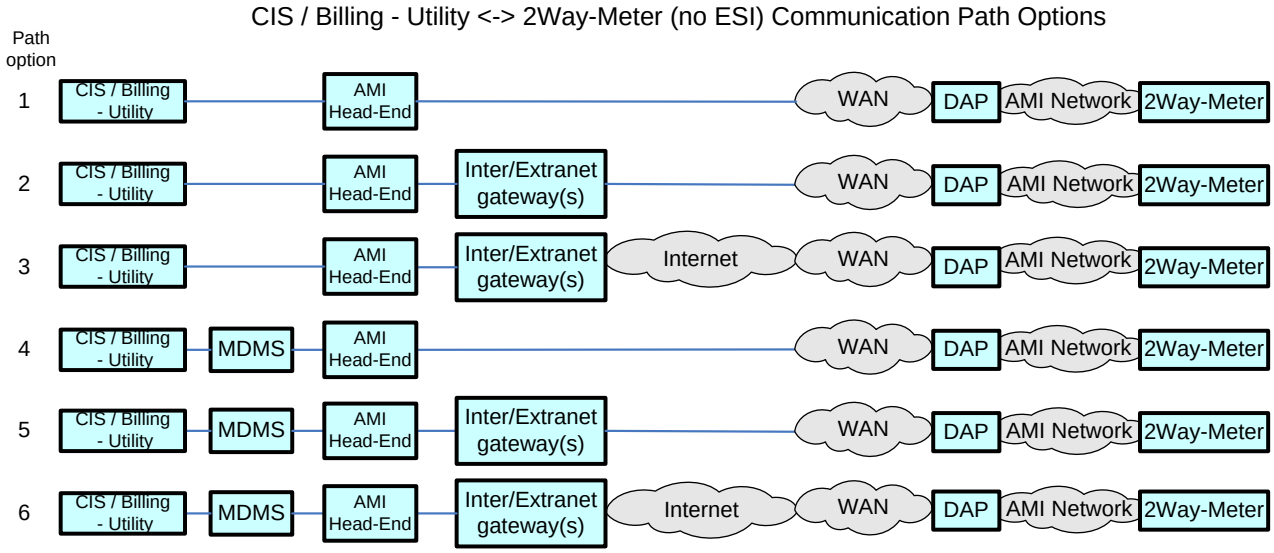

Figure 5.4-2 Alternative / Multiple Communication Paths – Options Example

The Path Option pseudo code for this graphic parsing is [1 or 2 or 3 or 4 or 5 or 6].

3.4.2 Payload Requirement Set Data Flow Ref Pseudo Code

The Requirement Table Parent rows' "Data Flow Ref" column contains pseudo code, specific to that payload requirement set which is another way to document the communication paths and some of the deployment decision points. As an example, to sync up with the Reference Diagram snippet Figure 5.4-1, that contains the electric, gas, and water meters, the "CIS/Billing – Utility" to "2Way-Meter – electr or gas or water", the Data Flow Ref pseudo code is

[(1Aa + 1B) or 1Ab] +
[1Ca or (1Cba + 1Cb) or (1Cba + 1Cc)] +
[1D or 1Dg or 1Dw]

3.4.3 Communication Path and Deployment Decisions Graphical Pseudo Code

Another approach to documenting the alternative communication paths and deployment decisions is the use of a combined graphic representation and pseudo code. For the "CIS/Billing – Utility" to "2Way-Meter –electr or gas or water", the communication path decisions include:

1. CIS/Billing to AMI Head-End (e.g. is the telecommunications path with or without MDMS)
2. AMI Head-End to DAP (across what networks and additional intermediary actors are being used, for which specific set of DAPs e.g. not all DAPs must use the same backhaul telecommunications path to AMI Head-End)

The deployment decision for the "CIS/Billing – Utility" to "2Way-Meter – electr or gas or water" is

D. DAP to 2Way-Meter (which meter: electr, gas, water, is driven by the deployment characteristics being studied)

These decisions are illustrated as:

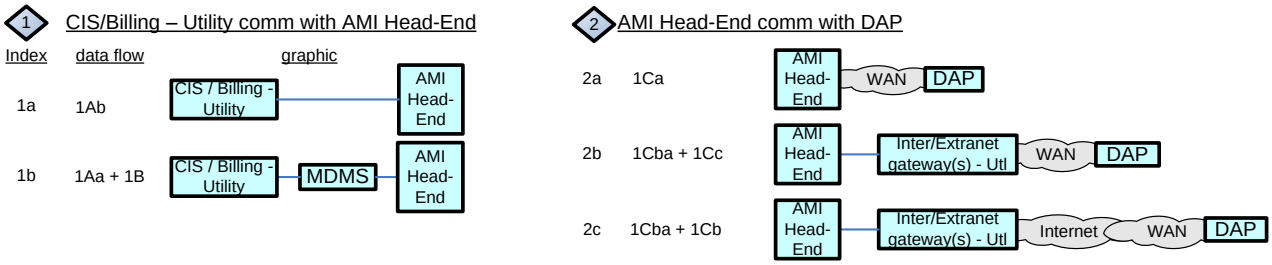

Figure 5.4-3 Alternative / Multiple Communication Paths Decisions – "CIS/Billing – Utility to DAP" Example

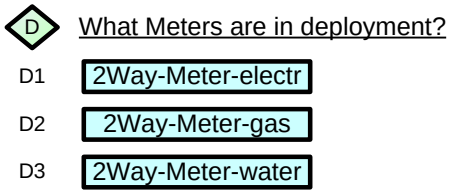

Figure 5.4-4 Deployment Decision – Meter-2way Example

The resultant decisions pseudo code in this example is

with the resultant pseudo code being (using the decision index values):

[(1a or 1b) + (2a or 2b or 2c) + (D1 or D2 or D3)]

3.4.4 Deployment Profiles

Deployment Profiles - Unique Deployment Decisions and Selected Comm-Paths

This method is a tabulation of all the unique combinations of the major deployment decisions and selections of specific communication paths. Those major decisions and selections include:

a) AMI , or DA, or AMI and DA
b) REPS (with or without)
c) HANs (with or without)
d) CIS-Utility comm. with AMI Head-End (direct or via MDMS)
e) AMI Head-End comm. with DAP (via WAN direct, or via InternetExtraNetGateway via WAN, or via InternetExtraNetGateway via Internet via WAN)
f) Meters (electr and/or gas and/or water and which enrolled in REP programs)
g) HAN Devices (which ones and which enrolled in REP programs)
h) Distribution Apps (centralized or distributed control)
i) Distribution Controller comm. with Feeder Line Devices (via WAN via RTU via substation FAN gateway, or via WAN, or via WAN via field FANgateway, or AMI Head-End to DAP)
j) Distribution Endpoints (which ones)
k) Use Cases (which ones of the set resulting from previous decisions and selections)

As the Use Case selections are applied, there will be changes to which Operations and Service Provider Actors, Interfaces, and Data Flows are included in that specific Deployment Profile. For the example "CIS/Billing – Utility" to "2Way-Meter –electr or gas or water" illustrated here**Error! Reference source not found.**, the major deployment decisions and selections of specific communication paths from the listed items above results in the following textual string:

> AMI, without REPS, without HANs, CIS-Utility comm. with AMI Head-End (direct or via MDMS), AMI Head-End comm. with DAP (via WAN direct, or via InterExtranetGateway via WAN, or via InterExtranetGateway via Internet via WAN), Meters (electr and/or gas and/or water), Use Cases (which ones of the set resulting from previous decisions and selections)

Which is further decomposed in the following table.

Deployment Profile Ref #	AMI or DA	REP	HAN	CIS to AMI Head-End	AMI Head-End to DAP	Which Meters	Which Use Cases
ACdW	AMI	No	No	direct	via WAN	tbd	tbd
ACdIW	AMI	No	No	direct	Via InterExtranetGway via WAN	tbd	tbd

ACdIIW	AMI	No	No	direct	via InterExtranetGway via Internet via WAN	tbd	tbd
ACvW	AMI	No	No	via MDMS	via WAN	tbd	tbd
ACvIW	AMI	No	No	via MDMS	Via InterExtranetGway via WAN	tbd	tbd
ACvIIW	AMI	No	No	via MDMS	via InterExtranetGway via Internet via WAN	tbd	tbd

Table 5.4.1 Deployment Profile – Decisions and Selections - Example

The more complete tabulation of the deployment profiles as represented by the SG Network Task Force Reference Diagram r5.1, is found in the "Potential-deployment-profiles-r0.2.xls" file located at http://osgug.ucaiug.org/UtiliComm/Shared Documents/latest_release_deliverables/profiles
This file contains 72 AMI and 12 Distribution Deployment Profiles. The quantity of unique combinations of AMI and Distribution deployment profiles from this tabulation results in 948 unique profiles e.g. 72x12 + 72 + 12. Of those 948 unique deployment profiles, the more predominant or interesting ones includes:

Deployment Profile Ref #	REP	HAN	ESI	CIS to AMI Head-End	AMI Head-End to DAP	Which Meters & HAN Devices	Which endpoints in REP Programs
AHEMCdIW	No	Yes	InMtr	direct	Via InterExtranetGway via WAN	tbd	na
AHEMCvIW	No	Yes	InMtr	via MDMS	Via InterExtranetGway via WAN	tbd	na
AHE3CdIW	No	Yes	3rdPty	direct	Via InterExtranetGway via WAN	tbd	na
AHE3CvIW	No	Yes	3rdPty	via MDMS	Via InterExtranetGway via WAN	tbd	na
AHEM3CdIW	No	Yes	InMtr, 3rdPty	direct	Via InterExtranetGway via WAN	tbd	na
AHEM3CvIW	No	Yes	InMtr, 3rdPty	via MDMS	Via InterExtranetGway via WAN	tbd	na
ARHEMCdIW	Yes	Yes	InMtr	direct	Via InterExtranetGway via WAN	tbd	tbd
ARHEMCvIW	Yes	Yes	InMtr	via MDMS	Via InterExtranetGway via WAN	tbd	tbd

Deployment Profile Ref #	REP	HAN	ESI	CIS to AMI Head-End	AMI Head-End to DAP	Which Meters & HAN Devices	Which endpoints in REP Programs
ARHE3CdIW	Yes	Yes	3rdPty	direct	Via InterExtranetGway via WAN	tbd	tbd
ARHE3CvIW	Yes	Yes	3rdPty	via MDMS	Via InterExtranetGway via WAN	tbd	tbd
ARHEM3CdIW	Yes	Yes	InMtr, 3rdPty	direct	Via InterExtranetGway via WAN	tbd	tbd
ARHEM3CvIW	Yes	Yes	InMtr, 3rdPty	via MDMS	Via InterExtranetGway via WAN	tbd	tbd

Table 5.4.2 Deployment Profile – Decisions and Selections – AMI Examples

Deployment Profile Ref #	Centralized or Decentralized Apps	Using SCADA or AMI networks	Using Independent or AMI Mgt of network gear	DAC/DMS comm. to Fdr Line Devices	Which Fdr Line Devices
DCSIRsF	Centralized	D-SCADA	Independent	Via WAN via RTU via subFANGway	tbd
DCSIW	Centralized	D-SCADA	Independent	Via WAN	tbd
DCSARsF	Centralized	D-SCADA	AMI	Via WAN via RTU via subFANGway & via DAP	tbd
DDIsF	Decentralized	D-SCADA	Independent	Via WAN via DAC via subFANGway	tbd
DDARsF	Decentralized	D-SCADA	AMI	Via WAN via RTU via DAC via subFANGway & DAP	tbd
DDAAD	Decentralized	AMI	AMI	Via subFANGway & DAP	tbd

Table 5.4.3 Deployment Profile – Decisions and Selections – Distribution Automation Examples

3.4.5 Alternative / Multiple Communication Paths Summary

Mapping Across the Four Communication Path & Deployment Decision Methods

The relationship (mapping) across these four methods for documenting the communication path options and deployment decisions, provides the ability to translate from one method to another depending upon the readers preference.

Using the "CIS/Billing – Utility" to "2Way-Meter – electr or gas or water" example, the mapping across the four methods illustrate the intended interpretation of extracting the specific payloads as driven by the users specified communication path and deployment decisions.

Graphic Parsing		Data Flow		Graphic Decisions		Deployment Profile
[1 or 2 or 3 or 4 or 5 or 6]	=			[(1a or 1b) + (2a or 2b or 2c) +<D>]	≈	[ACdW or ACdIW or ACdIIW orACvW or ACvIW or ACvIIW]
		[(1Aa + 1B) or 1Ab] + [1Ca or (1Cba + 1Cc) or (1Cba + 1Cb)] + [1D or 1Dg or 1Dw]	=	[(1a or 1b) + (2a or 2b or 2c) + (D1 or D2 or D3)]		
If the right hand side of the parent actor pairing was a specific actor and the same across all thread examples e.g. "Meter-2way-electr", then all four methods would equate (via the pseudo code) to each other as shown below.						
[1 or 2 or 3 or 4 or 5 or 6]	=	[(1Aa + 1B) or 1Ab] + [1Ca or (1Cba + 1Cc) or (1Cba + 1Cb)] + 1D	=	[(1a or 1b) + (2a or 2b or 2c) + D1	≈	[ACdW or ACdIW or ACdIIW orACvW or ACvIW or ACvIIW]
And more specifically, if the communication path decision is (selecting on the Graphic Parsing option 5), the pseudo code results in the following equivalence						
5	=	(1Aa + 1B) + (1Cba + 1Cc) + 1D	=	1a + 2b + D1	≈	ACvIW

Table 5.4-4 Telecommunications Path & Deployment Decisions Pseudo Code Mapping – Meter-2way Example

These communication path and deployment decisions need to be made, and programmatically applied to the Requirement Table content (preferably as that capability in the Requirements Database), for the correct selection of the application requirements specific to the intended deployment being contemplated and/or studied.

The remainder of this section illustrates and describes in Graphic Decisions pseudo code, most of the communication path and deployment decision points as contained in Requirements Table 5.1.

Communication Path Decision Points – set 0

A Utility System of Record for HAN device Join and Un-Join per offered program

- A1 CIS / Billing - Utility
- A2 MDMS

B Which Utility or REP actor for DR-DLC or Price to Meter – Electr and HAN devices

- B1 DSM
- B2 LMS

C What ESIs are in deployment?

- C1 ESI - InMtr
- C2 ESI - Utl
- C3 ESI – 3rd Pty

D What Meters are in deployment?

- D1 2Way-Meter-electr
- D2 2Way-Meter-gas
- D3 2Way-Meter-water

E What HAN devices are in deployment?

- E1 IPD
- E2 Cust. EMS
- E3 PCT
- E4 Load Cntl Device
- E5 EVSE/EUMD
- E6 SmtAppl
- E7 2Way-Meter-electr
- E8 2Way-Meter-gas
- E9 2Way-Meter-water

F Which DAC is in deployment?

- F1 DAC - Ops
- F2 DAC - Distr

G What Feeder devices are in deployment?

- G1 Regulator
- G2 Cap Bank
- G3 Field Sensor
- G4 Sectionalizer
- G5 Switch
- G6 Recloser
- G7 Distr Cust Str
- G8 Distr Cust Gen

Figure 5.4-5 Deployment Decision – Requirements Table 5.1

Communication Path Decision Points – set 1

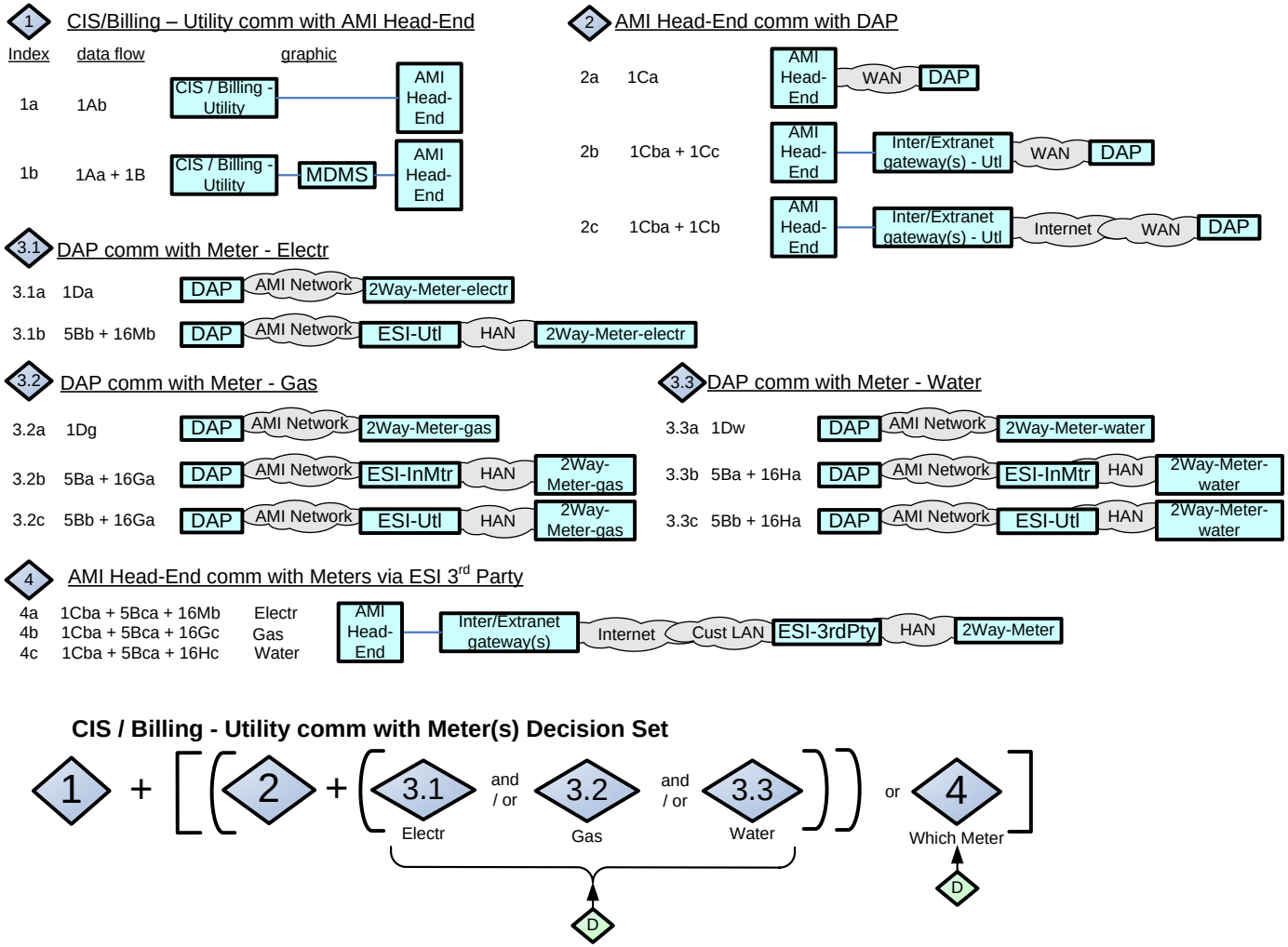

Figure 5.4-6 Telecommunications Path Decision Set 1 – Requirements Table 5.1

Communication Path Decision Points – set 2

5 DAP comm with HAN devices via Utility ESIs

Index	data flow	
5.1a	5Ba + 16Aa	IPD
5.1b	5Ba + 16Ba	EVSE/EUMD
5.1c	5Ba + 16Ca	Custr EMS
5.1d	5Ba + 16Da	SmAppl
5.1e	5Ba + 16Ea	PCT
5.1f	5Ba + 16Ga	Gas
5.1g	5Ba + 16Ha	Water

graphic

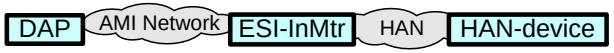

5.2a	5Bb + 16Ab	IPD
5.2b	5Bb + 16Bb	EVSE/EUMD
5.2c	5Bb + 16Cb	Custr EMS
5.2d	5Bb + 16Db	SmAppl
5.2e	5Bb + 16Eb	PCT
5.2f	5Bb + 16Gb	Gas
5.2g	5Bb + 16Hb	Water
5.2h	5Bb + 16Mb	Electr

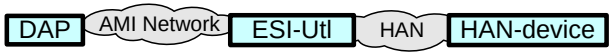

6 AMI Head-End comm with HAN devices via ESI 3rd Party

6a	1Cba + 5Bca + 16Ac	IPD
6b	1Cba + 5Bca + 16Bc	EVSE/EUMD
6c	1Cba + 5Bca + 16Cc	Custr EMS
6d	1Cba + 5Bca + 16Dc	SmAppl
6e	1Cba + 5Bca + 16Ec	PCT
6f	1Cba + 5Bca + 16Gc	Gas
6g	1Cba + 5Bca + 16Hc	Water
6h	1Cba + 5Bca + 16Mb	Electr

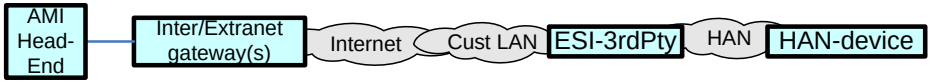

CIS/Billing - Utl comm with HAN devices Decision Set

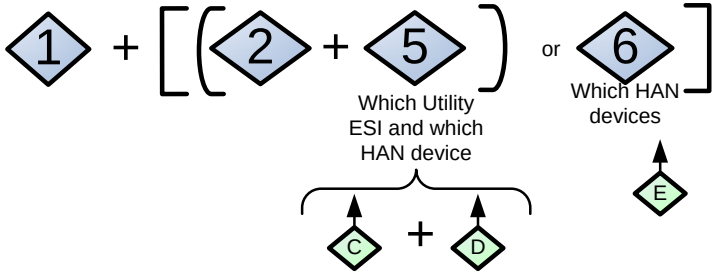

Figure 5.4-7 Telecommunications Path Decision Set 2 – Requirements Table 5.1

Communication Path Decision Points – set 3

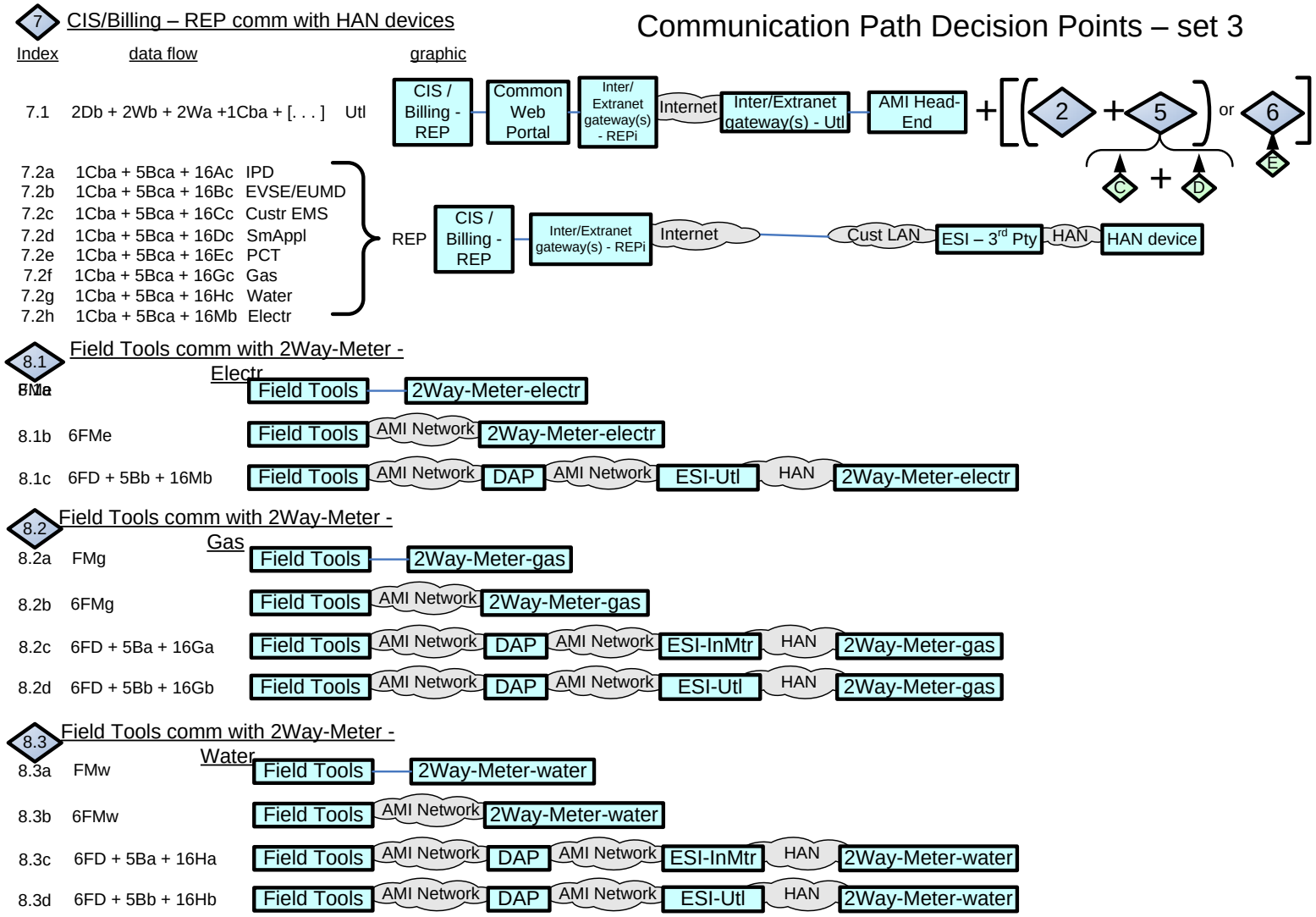

Figure 5.4-8 Telecommunications Path Decision Set 3 – Requirements Table 5.1

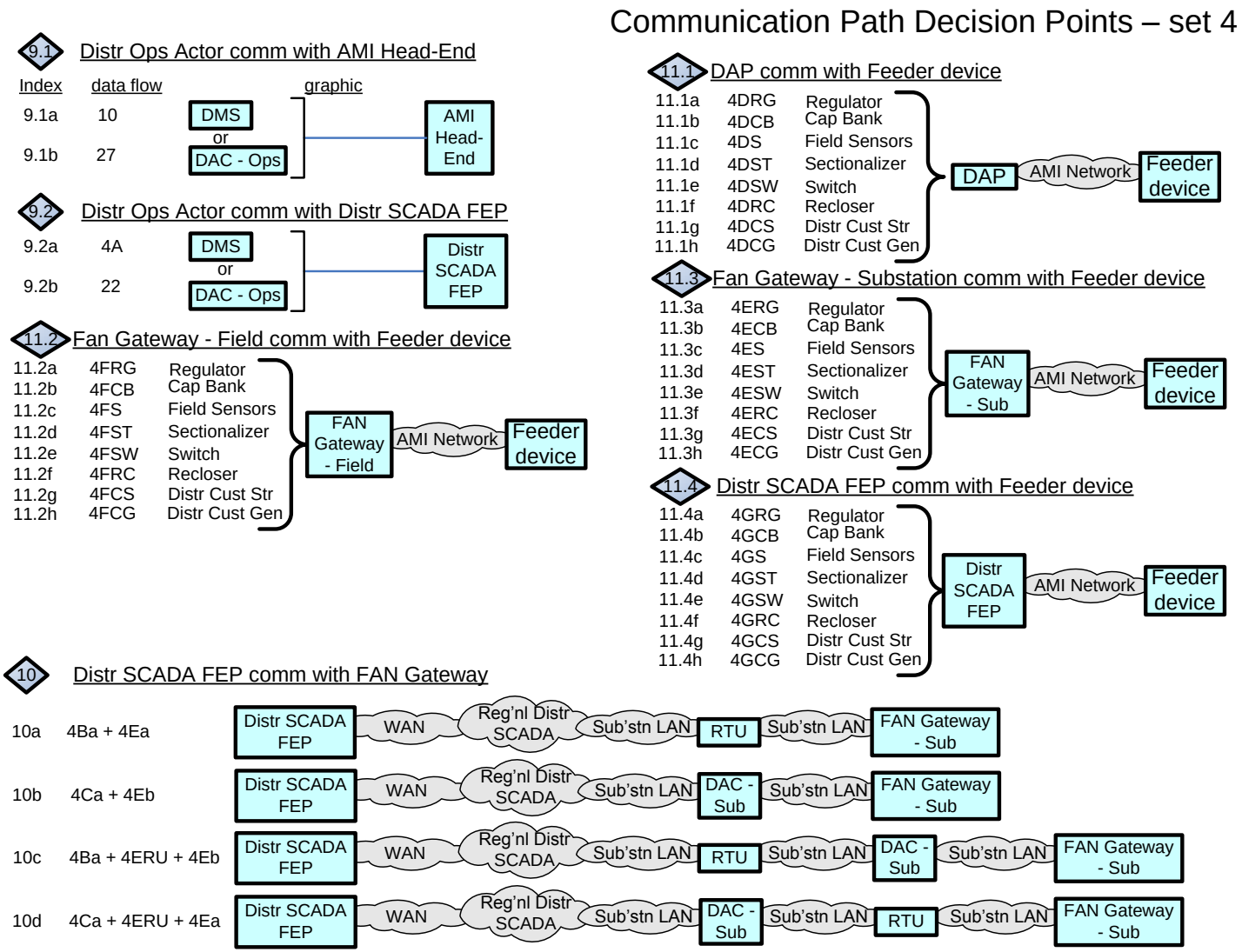

Figure 5.4-9 Telecommunications Path Decision Set 4 – Requirements Table 5.1

Communication Path Decision Points – set 5

Distr Ops Actor comm with Feeder device Decision Set

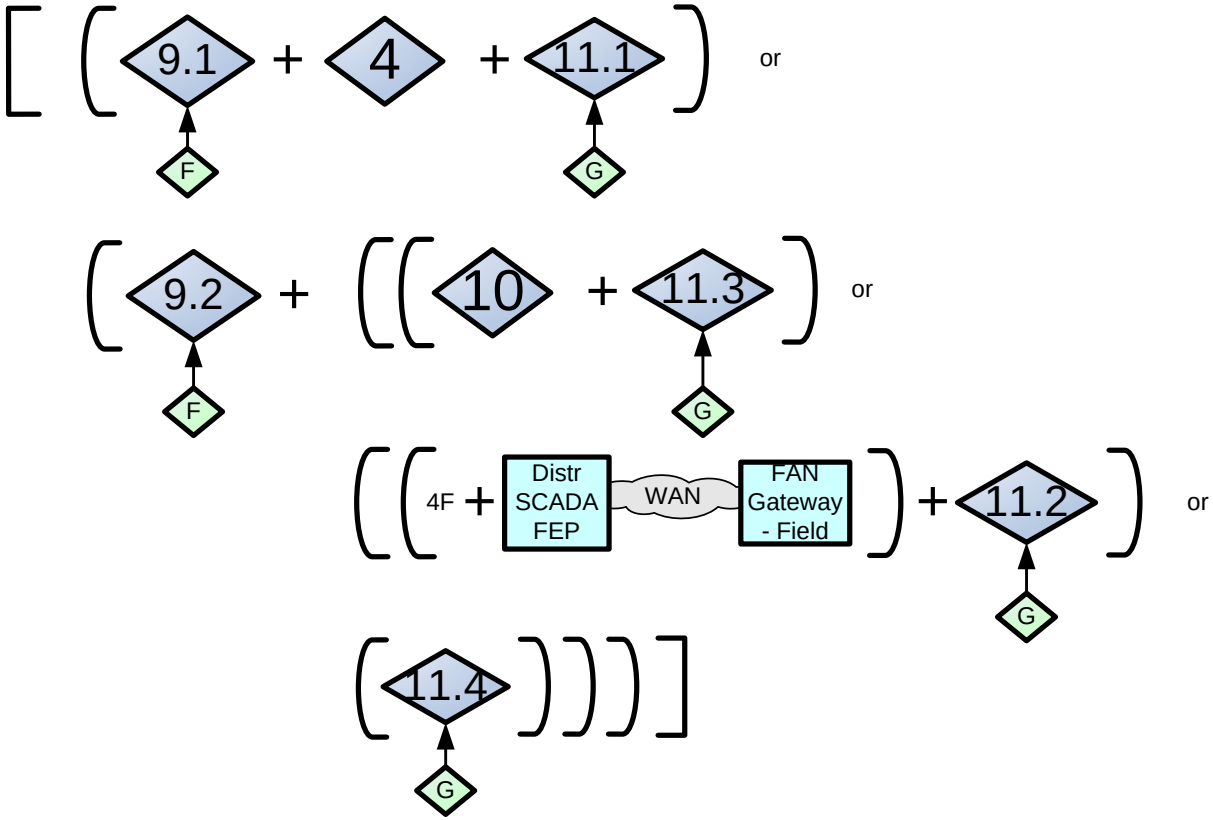

Figure 5.4-10 Telecommunications Path Decision Set 5 – Requirements Table 5.1

Communication Path Decision Points – set 6

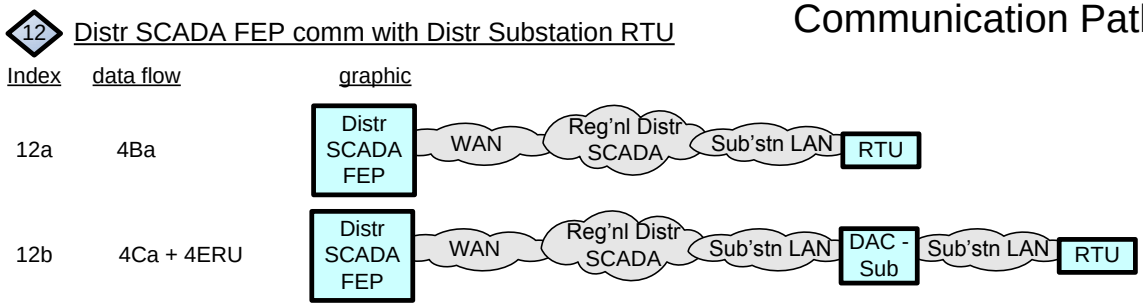

Distr Ops Actor comm with Distr Substation device Decision Set

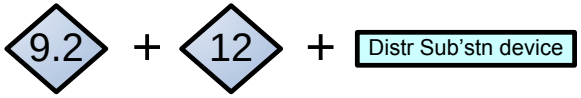

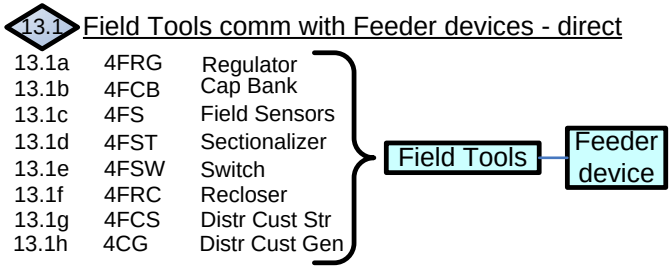

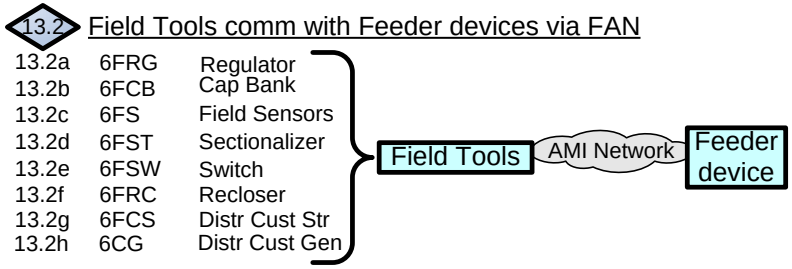

Distr SCADA FEB comm with Feeder device Decision Set

Figure 5.4-11 Telecommunications Path Decision Set 6 – Requirements Table 5.1

3.5 Terms and Definitions

The use of a common vocabulary has been of critical important in the development of this and other Smart Grid related work products. All pertinent terms and definitions utilized in this document are listed in the appendix section of this document.

4 Included Use Cases

The SG-Network task force developed requirements for the following use cases.

Use Case In Section 4	Use case name in the requirements Spreadsheet
Customer Information & Messaging	Cust. Info / Msgn'ng
Distribution Automation	Field DA Maint - Centralized Control
Distribution Automation	Volt/VAR - Centralized Control
Distribution Automation	DSDR - Centralized Control
Distribution Automation	FCIR - Distr DAC, FCIR – DMS, FCIR - Regnl Distr DAC
Distribution Customer Storage	Dispatch Distr. Cust. Storage
Distribution Customer Storage	Islanded Distr. Cust. Storage
Demand Response	DR-DLC
Electric Service Prepayment	PrePay
Electric Transportation	PHEV
Firmware Updates and Program / Configuration Use Cases	Firmware / Program Update
Meter Reading Use Cases	Meter Reading
Meter System Events	Meter Events
Outage and Restoration Management	ORM
Premises Network Administration	Premise Network Admin
Pricing TOU / RTP / CPP	Price
Utility Service Switch/Valve Operation	Service Switch

4.1 How use cases are used

The SG-Network task force used a wide variety of use cases for input for creating non-functional requirements. Sources for these use cases include artifacts available at the SGIP IKB, Gridwise Architect Council, EPRI, Southern California Edison, etc. The sequences of message flows when available within these use cases were used and expanded upon as necessary. This document summarizes these message flows as use case scenarios.

4.2 Identification of pertinent application payloads

While creating requirements, the SG-Network task force also documented the payloads' general characteristics. For each payload the following data was identified: payload name and type; general description, PAP02 baseload or highload flags, primary attributes, mapping to NISTIR 7628 v1.0 Logical Interface Categories (LICs); and security confidentiality, integrity, availability (CIA) risk values along with rationale for those CIA values from an operational and business perspective.

Payload Name	Payload Type	Description	Application Payload-attributes (excludes comm packet fields), date-time-stamps assumed for all payloads	Security LICs - NISTIR 7628 - associated to Payload	Non-Functional Application Payload C-I-A	Non-Functional Application Payload C-I-A Risk Values (and/or LIC) - Rational & Comments
Audit_Application_Event	ack	Meter sends Meter event to Operations actor e.g. MDMS, occurs when a preconfigured criteria is met e.g.: a) failure or exception in an execution of an application or out of band/bounds condition; b) not able to service request or request timed out; c) system activity	Meter ID, event type/Code	13	L-M-M	C - none to minimal harm to customer or organization for access to/disclosure of payload data; I - a false negative or false positive ack code associated to a specific meter may lead to an incorrect next workflow process execution that may lead to serious effect on safe reliable operation of the meter; A - not receiving this payload from a specific meter might lead to lead to an inappropriate action/operation being taken that may have a serious effect on safe reliable electric operation of the meter;
batt_pwr_notification	alarm	Indication that network or end-point device is running solely on battery power	Device ID, status of mains power	13, 20	L-L-L	C - none to minimal harm to customer or organization for access to/disclosure of payload data; I - a false negative or false positive payload attributes associated to a specific device may lead to an unnecessary health check of the device; A - not receiving this payload from a specific device may lead to device becoming unavailable for it's intended role when battery power is drained, at which point lose of communication with device would eventually be detected.
bulk_Cust_Subset_Acct_Info_REP_data	resp-data	CIS/Billing - REP sends several large files (batches) of REP account information to the REP's ODW per day	Account ID, Premise ID, Premise address, billing address, Meter ID, payment history, current billing, general account information (programs enrolled in) - Utility meter customers	7	H-M-L	C - severe to catastrophic harm to customer or organization for access to/disclosure of payload data; I - inaccurate data (specific to more than one account), may lead to an incorrect next workflow process execution that may lead to serious lost of Customer trust and increased frustration with REP, and/or complaint filed with jurisdiction; A - not receiving this payload would create stale data for a batch of accounts and may trigger an immediate retry or retry at next file transfer period
bulk_Cust_Subset_Acct_Info_Util_data	resp-data	CIS/Billing - Utility sends several large files (batches) of Utility account information to the Utility's ODW per day	Account ID, Premise ID, Premise address, billing address, Meter ID, payment history, current billing, general account information (programs enrolled in) - Utility meter customers	7	H-M-L	C - severe to catastrophic harm to customer or organization for access to/disclosure of payload data; I - inaccurate data (specific to more than one account), may lead to an incorrect next workflow process execution that may lead to serious lose of Customer trust and increased frustration with Utility, and/or complaint filed with jurisdiction; A - not receiving this payload would create stale data for a batch of accounts and may trigger an immediate retry or retry at next file transfer period

Figure 3 Application Payload

5 Use Cases and Telecommunications Requirements

5.1 Overview and Context

The use cases listed in this section are intended to provide a summarization of the various use cases reviewed and analyzed by the SG Network task force. The corresponding use case requirements listed in this document represent requirements gathered from the utilities that participated in the SG Network task force and illustrated as reference for the worst case scenario. In actual practice readers should establish requirements that best address the objectives of their company's specific business case and operational requirements.

Wherever possible the use cases have been summarized in order to provide concise information about the processes, actors and requirements. Additional information relating to the use cases is available at the SG Network Share point website[1].

5.2 Description of how the use cases are documented

The following sections contain a consistent format as follows:

Overview – Narrative for the use case category.

Reference Architecture – Illustration of the actors within their domains and how communication flows

Possible communication paths - Illustrative representation that shows the possible communication flows

Actors – List of actors with a brief description

Applicable Payloads Information – List of payloads that are used within the use case

Scenarios – A narrative of a specific business process/functions along with a set of payloads that achieve these process/functions

[1] http://osgug.ucaiug.org/UtiliComm/Shared%20Documents/Forms/AllItems.aspx

5.3 Customer Information & Messaging

5.3.1 Overview

In order to provide a customer access to their account information, information needs to be sent to the appropriate operational data warehouse and web portal. This information may be served from a utility, third party Retail Energy Producer (REP) or a political jurisdiction. The following scenarios are considered with this use case.

- Utility or REP sends Customer Account Information to ODW – Utility or ODW - REP
- Utility sends Customer Metered Usage, Messages and Outage information to ODW - Utility
- Customer requests account information from Utility or REP
- Operational Data Warehouse sends appropriate customer information to the web portal
- timeline

5.3.1.1 Reference Architecture with Domains, Actors and Interfaces

Smart Grid Conceptual Actors / Data Flow Diagram – Cross Domain Network Focused – OpenSG / SG-Network TF

Cust. Info/Messaging Use Case

DRAFT 14Feb2012
Base – file SG-NET-diagram-r5.1.vsd
page size: ANSI-D

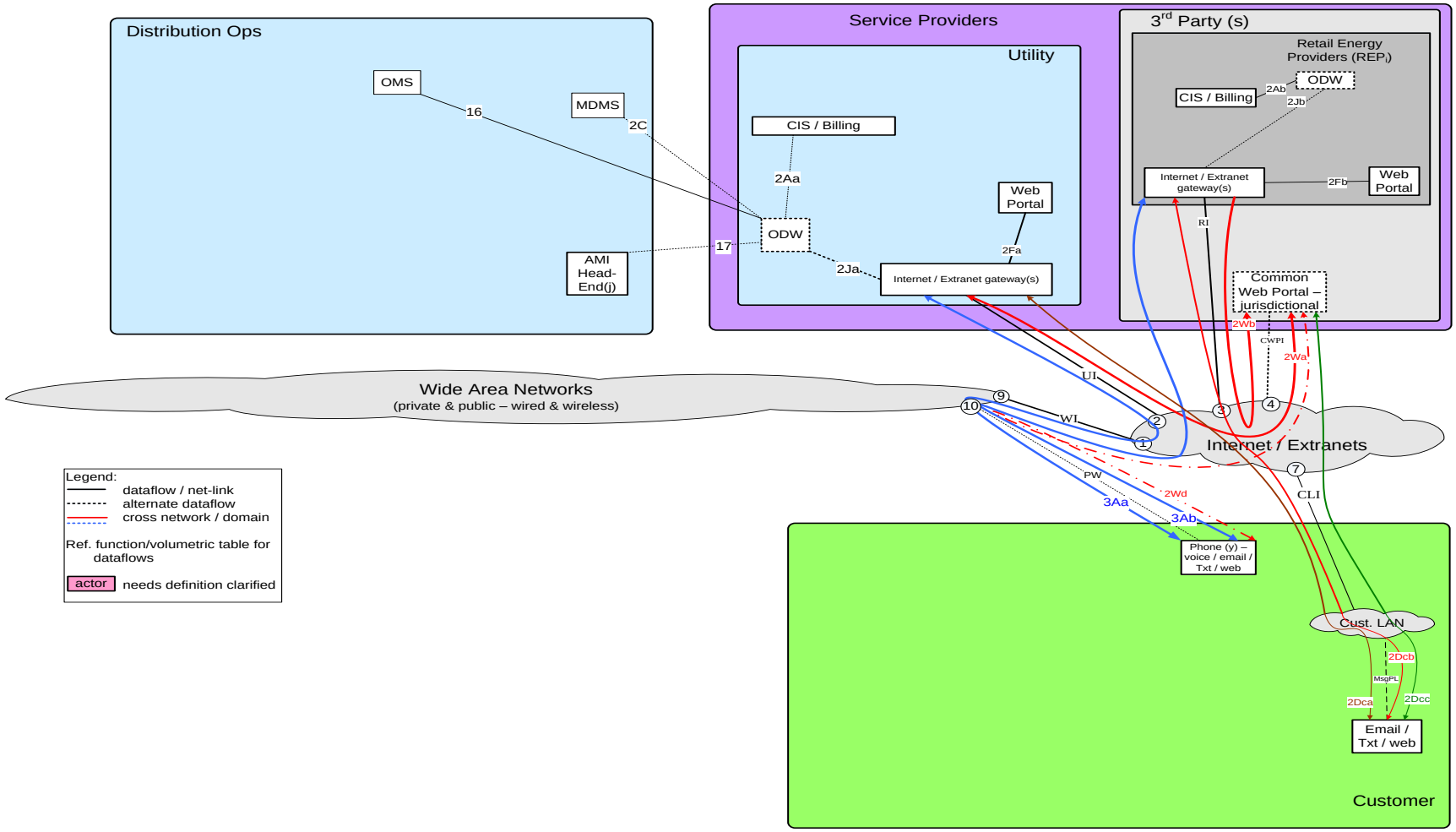

5.3.1.2 Possible communication paths

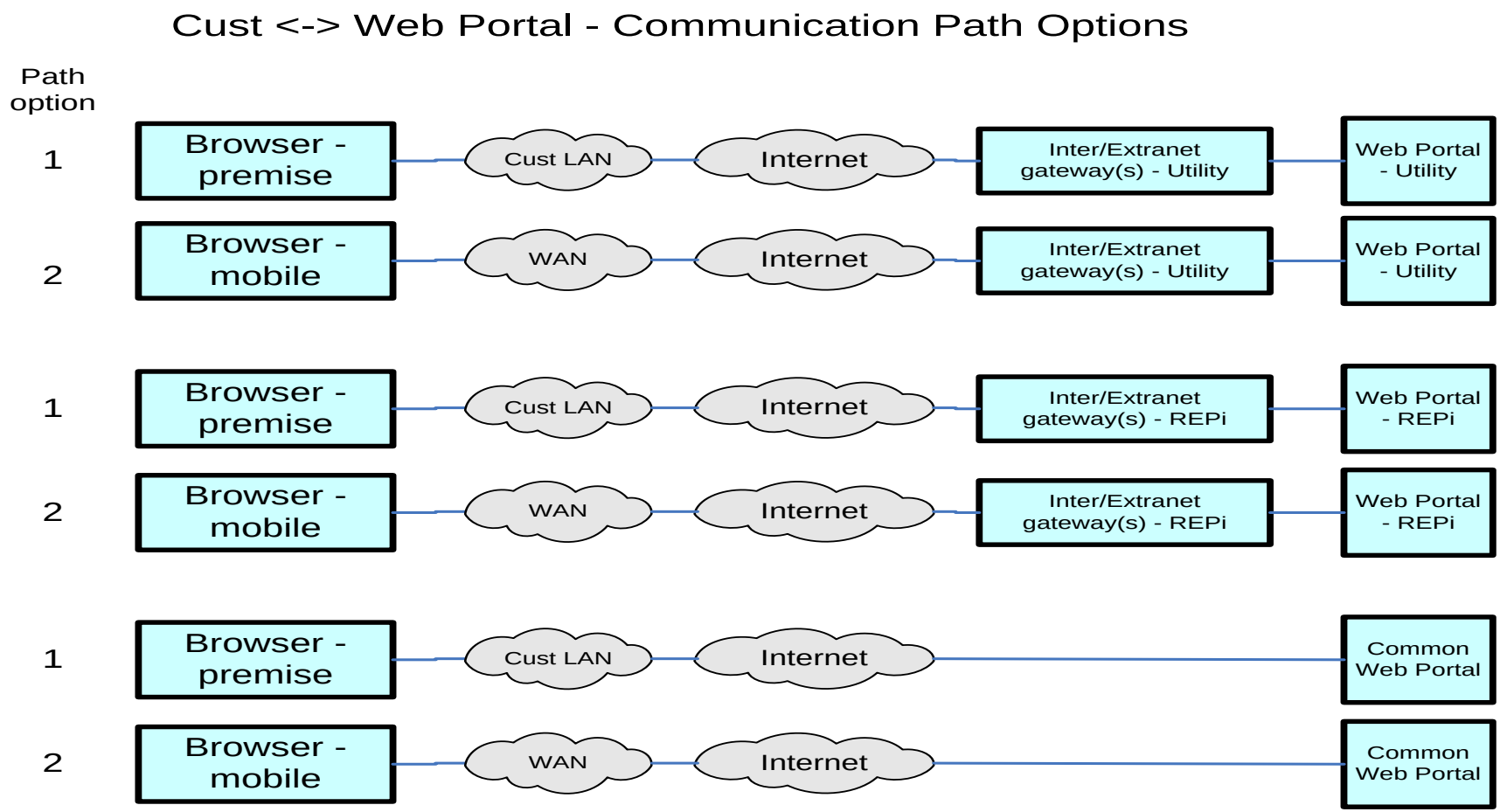

5.3.2 Actors

Actor	Description
Common Web Portal	Web interface for Regional Transmission Operator, customers, retail electric providers and transmission/distribution service provider to function as a clearing house for energy information.
Cust. Browser - Mobile	A mobile device World Wide Web compliant internet browser (e.g. Internet Explorer, Google Chrome, Safari, Mozilla Firefox) used by a customer.
Cust. Browser - Premise	A World Wide Web compliant internet browser (e.g. Internet Explorer, Google Chrome, Safari, Mozilla Firefox) used within a customer's premises.
Internet / Extranet gateway(s) - REPi	These are gateways used to connect internal utility networks with external networks.
Internet / Extranet gateway(s) - Utility	These are gateways used to connect internal utility networks with external networks.
ODW - REPi	REPi's Operational Data Warehouse
ODW - Utility	Utility's Operational Data Warehouse
Web Portal – REPi	REPi's Web interface for Regional Transmission Operator, customers, retail electric providers and transmission/distribution service provider to function as a clearing house for energy information. Commonly used in deregulated markets.
Web Portal – Utility	Utility's Web interface for Regional Transmission Operator, customers, retail electric providers and transmission/distribution service provider to function as a clearing house for energy information. Commonly used in deregulated markets.

5.3.3 Applicable Payload Information

Payload Name	Description	CSWG LICs	C-I-A	Confidentiality	Integrity	Availability
bulk_Cust_Subset_Acct_Info_REP_data	CIS/Billing - REP sends several large files (batches) of REP account information to the REP's ODW per day	7	H-M-L	Severe to catastrophic harm to customer or organization for access to/disclosure of payload data	Inaccurate data (specific to more than one account), may lead to an incorrect next workflow process execution that may lead to serious lost of Customer trust and increased frustration with REP, and/or complaint filed with jurisdiction	Not receiving this payload would create stale data for a batch of accounts and may trigger an immediate retry or retry at next file transfer period
bulk_Cust_Subset_Acct_Info_Util_data	CIS/Billing - Utility sends several large files (batches) of Utility account information to the Utility's ODW per day	7	H-M-L	Severe to catastrophic harm to customer or organization for access to/disclosure of payload data	Inaccurate data (specific to more than one account), may lead to an incorrect next workflow process execution that may lead to serious lose of Customer trust and increased frustration with Utility, and/or complaint filed with jurisdiction	Not receiving this payload would create stale data for a batch of accounts and may trigger an immediate retry or retry at next file transfer period
bulk_Cust_Subset_Acct_Premise_Info_REP_data	ODW - REP sends 1 large upload of REP customer account info per day to REP's web portal and optional Common Web Portal for access by the REP's customers	`7/ 8	H-M-L	Severe to catastrophic harm to customer or organization for access to/disclosure of payload data	Inaccurate data (specific to more than one account), may lead to serious lose of Customer trust and increased frustration with REP, and/or complaint filed with jurisdiction	Not receiving this payload would create stale data for a batch of accounts and may trigger an immediate retry or retry at next file transfer period
bulk_Cust_Subset_Acct_Premise_Info_Util_data	ODW - Utility sends 1 large upload of Utility customer account info per day to Utility's web portal and optional Common Web Portal for access by the Utility's customers	`7/ 8	H-M-L	Severe to catastrophic harm to customer or organization for access to/disclosure of payload data	Inaccurate data (specific to more than one account), may lead to serious lose of Customer trust and increased frustration with Utility, and/or complaint filed with jurisdiction	Not receiving this payload would create stale data for a batch of accounts and may trigger an immediate retry or retry at next file transfer period
bulk_Cust_Subset_meter_comm_Info_Util_data	AMI Head-End sends several large files (batches) of meter information gathered from the Utility meters appropriate for storage/use in the ODW - Utility	7	L-M-L	None to minimal harm to customer or organization for access to/disclosure of payload data	Inaccurate payload attributes (specific to more than one meter associated to a specific batch of meters), may lead to an unnecessary health check of the meter or telecomm network or associated applications or inaccurate reporting to jurisdictions	Not receiving this payload would create stale data for a batch of meters and may trigger an immediate retry or retry at next file transfer period

Payload Name	Description	CSWG LICs	C-I-A	Confidentiality	Integrity	Availability
bulk_Cust_Subset_meter_Info_Util_data	MDMS sends several large files (batches) of Utility meter information to the ODW - Utility	7	M-M-L	Serious harm to organization for not showing good stewardship (unauthorized access to/disclosure) of large amounts of meter payload data	Inaccurate data (specific to more than one account), may lead to an incorrect next workflow process execution that may lead to serious lose of Customer trust and increased frustration with Utility, and/or complaint filed with jurisdiction	Not receiving this payload would create stale data for a batch of accounts and may trigger an immediate retry or retry at next file transfer period
bulk_Cust_Subset_meter_outage_Info_Util_data	OMS sends several large files (batches) per day of Utility Meter service outage information to ODW - Utility	7	M-M-L	Serious harm to organization for not showing good stewardship (unauthorized access to/disclosure) of large amounts of meter payload data	Inaccurate payload attributes (specific to more than one meter), associated to a specific batch of meters may lead to an unnecessary health check of the meter or telecomm network or associated applications or inaccurate reporting to jurisdictions	Not receiving this payload would create stale data for a batch of meters and may trigger an immediate retry or retry at next file transfer period
Cust_Acct_Info_cmd	Customer (after a separate authentication to their energy providers web portal), sends a request for Customer's account information	16	M-M-L	Minimal to serious harm to customer or organization (if in-scale), for access to/disclosure of Account ID and query type	Inaccurate account ID and query type could lead to serious impact (if in-scale) to incorrect customer-to-accountID association eg wrong results sent to the wrong customer	Not receiving this payload could lead to customer frustration and/or complaint being filed with jurisdiction
Cust_Acct_Info_resp-data	Energy providers Web Portal sends requested Customer's account information to Customer's web interface (after Customer authentication/authorization)	16	H-M-L	Limited harm to customer (unless name included and associated to account ID) and severe to catastrophic harm to organization especially in-scale, for access to/disclosure of payload data	Inaccurate account ID and/or query type could lead to a customers account information sent to the wrong party or correct customer taking inappropriate actions based on the response data	Not receiving this payload could lead to customer frustration and/or complaint filed with jurisdiction
on-demand_Mtr-read_cmd_comm_err	IHD or Cust EMS or DAP or AMI Head-End sends message to MDMS, NMS, and/or CIS/Billing - Utility of issue with adhoc meter read request. Even though Meter is not a electric grid critical infrastructure component, this payload may be used in performing meter and telecomm network diagnostics.	13, 20	L-L-L	None to minimal harm to customer or organization for access to/disclosure of payload data	A false negative or false positive payload attributes associated to a specific meter may lead to an unnecessary health check of the meter and the telecomm network to the meter	Not receiving this payload to the command may lead to multiple repeated attempts to request the on-demand meter read, which may lead to a specific customers frustration and/or complaint filed with jurisdiction

5.3.4 Scenarios

5.3.4.1 Scenario: Utility or REP sends Customer Account Information to ODW – Utility or ODW - REP

Narrative

Utility periodically sends in bulk transactions Customer Account Information to the Operation Data Warehouse. These transactions contains information about customer information such as address, premise ID,etc.

Business Objectives

Payload Name	Payload Type	Payload Attributes	PAP02 Baseload (routine)	PAP02 Highload (full load)	Originating Actor	Destination Actor	Reliability	Latency	When	How Often	Payload Size
bulk_Cust_Subset_Acct_Info_REP_data	resp-data	Account ID, Premise ID, Premise address, billing address, Meter ID, payment history, current billing, general account information (programs enrolled in) - Utility meter customers	X	X	CIS/Billing - REPi	ODW - REPi	> 99.5%	< 1 hr	10pm - 6am	x per | REPi-ODW per | z per day (y Mtrs per z)	xMB
bulk_Cust_Subset_Acct_Info_Util_data	resp-data	Account ID, Premise ID, Premise address, billing address, Meter ID, payment history, current billing, general account information (programs enrolled in) - Utility meter customers	X	X	CIS/Billing - Utility	ODW - Utility	> 99.5%	< 1 hr	10pm - 6am	x per | Utl per | day (batches of y Mtrs)	xMB

5.3.4.2 Scenario: Utility sends Customer Metered Usage, Messages and Outage information to ODW - Utility

Narrative

Utility periodically sends in bulk transactions Customer Account Information to the Operation Data Warehouse. These transactions contain information from the Utilities Head End, MDMS, OMS and CIS.

Business Objectives

Payload Name	Payload Type	Payload Attributes	PAP02 Baseload (routine)	PAP02 Highload (full load)	Originating Actor	Destination Actor	Reliability	Latency	When	How Often	Payload Size
bulk_Cust_Subset_meter_comm_Info_Util_data	resp-data	Meter ID, meter read success stats	X	X	AMI Head-End(j)	ODW - Utility	> 99.5%	< 1 hr	10pm - 6am	1 per | Utl-ODW per | day	xMB
bulk_Cust_Subset_meter_Info_Util_data	resp-data	Meter ID, Current meter Readings, meter read history	X	X	MDMS	ODW - Utility	> 99.5%	< 1 hr	10pm - 6am	1 per | Utl-ODW per | day	xMB
bulk_Cust_Subset_meter_outage_Info_Util_data	resp-data	Meter ID, outage information (reported outage, expected restore date/time, any assigned trouble ticket)	X	X	OMS	ODW - Utility	> 99.5%	< 1 hr	10pm - 6am	1 per | Utl-ODW per | day	xMB

5.3.4.3 Scenario: Customer requests account information from Utility or REP

Narrative

The customer logs onto a jurisdictional, utility or REP (retail energy provider) web portal and requests information about their account from a personal computer or a mobile device.

Business Objectives

Payload Name	Payload Type	Payload Attributes	PAP02 Baseload (routine)	PAP02 Highload (full load)	Originating Actor	Destination Actor	Reliability	Latency	When	How Often	Payload Size
Cust_Acct_Info_cmd	cmd	Account ID, query type	X	X	Cust. Browser - Premise,Cust. Browser - Mobile	Web Portal - Utility,Web Portal - REPi,Common Web Portal	> 99%	< 15 sec,< 30 sec	7AM - 10PM	100 per 1000 per | Utl-Mtr per | day,100 per 1000 per | REPi-Mtr per | day,100 per 1000 per | CommonWebPortal-Mtr per | day	50
Cust_Acct_Info_resp-data	resp-data	Customer's Account ID, Premise ID, Meter ID, Premise Address, billing address, payment history, current billing, general account information (programs enrolled in), energy/demand usage history	X	X	Web Portal - Utility,Web Portal - REPi,Common Web Portal	Cust. Browser - Premise,Cust. Browser - Mobile	> 99%	< 15 sec,< 30 sec	7AM - 10PM	100 per 1000 per | Utl-Mtr per | day,100 per 1000 per | REPi-Mtr per | day,100 per 1000 per | CommonWebPortal-Mtr per | day	200

5.3.4.4 Scenario: Operational Data Warehouse sends appropriate customer information to the web portal.

Narrative

The ODW needs to keep jurisdictional, utility and REP web portals up to date with the most recent customer information. This information may contain customer usage, outages, etc.

Business Objectives

Payload Name	Payload Type	Payload Attributes	PAP02 Baseload (routine)	PAP02 Highload (full load)	Originating Actor	Destination Actor	Reliability	Latency	When	How Often	Payload Size
bulk_Cust_Subset_Acct_Premise_Info_REP_data	resp-data	Account ID, Premise ID, Meter ID, Premise Address, billing address, payment history, current billing, general account information (programs enrolled in), energy/demand usage history, for REPs energy customers	X	X	ODW - REPi	Web Portal - REPi,Common Web Portal	> 99.5%	< 1 hr	10pm - 6am	1 per | REPi-portal per | day	xMB
bulk_Cust_Subset_Acct_Premise_Info_Util_data	resp-data	Account ID, Premise ID, Meter ID, Premise Address, billing address, payment history, current billing, general account information (programs enrolled in), energy/demand usage history, for Utility's energy customers	X	X	ODW - Utility	Web Portal - Utility,Common Web Portal	> 99.5%	< 1 hr	10pm - 6am	1 per | Utl-portal per | day	xMB

5.4 Distribution Automation

5.4.1 Overview

The following sections outline business use cases for distribution automation. Distribution Automation represents a fairly complex set of use cases and requirements. The implementations of these use cases, and their accompanying requirements, will vary from utility to utility. In addition, the implementation of distribution automation assets is not uniform across utilities.

The association of devices to specific use cases will vary across different distribution monitoring and control devices. The author's intent is to capture the numerous use case requirements across these monitoring and control devices. The intent is to reflect which use cases can be applied to different distribution automation devices.

Since utility's Distribution Automation implementations vary, the authors wished to provide a menu of different devices and use cases that could be customized to specific utility needs.

Initially we define the use cases by their respective business process. Since Distribution Automation is a complex application, encumbering numerous applications that can be implemented in a number of ways, we have attempted to map the Distribution Automation business processes to specific distribution devices in an effort to provide an accurate depiction of the roles and uses relating different devices in a distribution network.

This section will describe two basic use cases Distribution System Monitoring & Maintenance, and Voltage &VAR Control that are considered basic and necessary by most Utilities performing Distribution Automation. Additionally, the use cases of Distribution System Demand Response and Fault Detection, Clearing, Isolation and Restoration are included. In the case of Distribution System Demand Response, the use case scenarios are similar but the frequency of the scenarios changes. See the table on the next page for a mapping of Use Cases to Scenarios.

702

Scenarios	Distribution System Monitoring and Maintenance	Voltage and VAR Control	Distribution System Demand Response (DSDR)	Fault Detection, Clearing, Isolation and Restoration
Feeder Line Device Alarm	Included			
Feeder Line Device Deviation Alert	Included			
Feeder Line Device Operate Failure	Included			
Feeder Line Device Sensor Data Acquisition	Included		Included	
Feeder Line Device Status Change Alert	Included			
Feeder Line Device Sensor Data Maintenance	Included			
Feeder Capacitor Bank is Closed into load		Included	Included	
Feeder Capacitor Bank Configuration		Included	Included	
Feeder Capacitor Bank is Opened out of load		Included	Included	
Feeder Recloser Configuration		Included		
Feeder Regulator Configuration		Included	Included	
Feeder Regulator Step Down Command		Included	Included	
Feeder Regulator Step Up Command		Included	Included	
Feeder Sensor Configuration		Included	Included	
Feeder Switch is commanded to Close		Included	Included	
Feeder Switch Configuration		Included	Included	
Feeder Switch is commanded to Open		Included	Included	
DMS or DAC sends an operate request Feeder Line Devices				Included
DMS or DAC Requests Feeder Line Device Status				Included
Feeder Line Device reports Distribution Network Status				Included
Feeder Line Device sends fault alert				Included

5.4.1.1 Reference Architecture with Domains, Actors and Interfaces

Smart Grid Conceptual Actors / Data Flow Diagram – Cross Domain Network Focused – OpenSG / SG-Network TF

Distribution - Use Cases

DRAFT 14Feb2012
Base – file SG-NET-diagram-r5.1.vsd
page size: ANSI-D

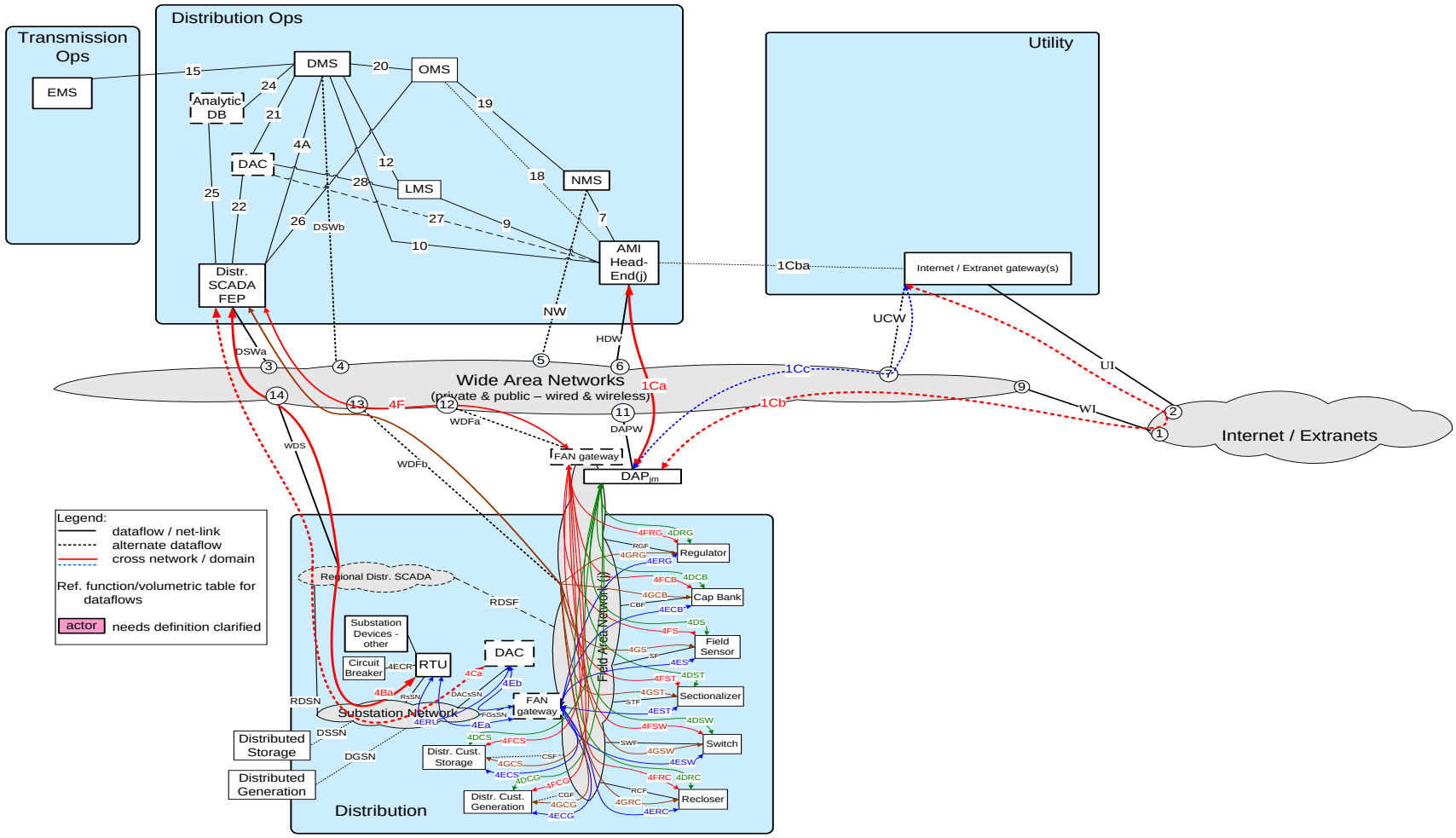

5.4.1.2 Possible communication paths

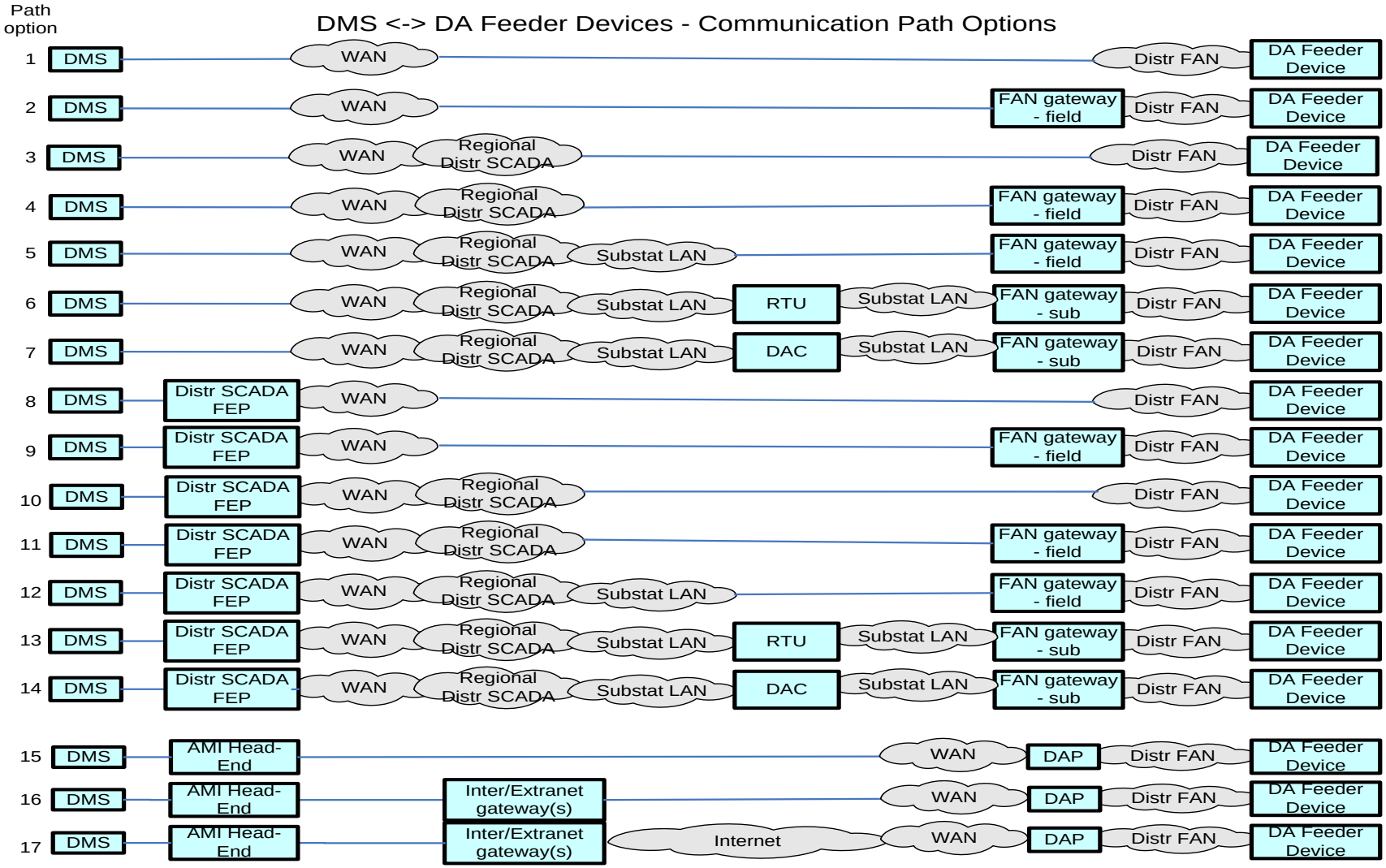

5.4.1.3 Actors

Actor	Description
AMI Head-End(j)	The AMI head end is responsible for the operation and coordination of AMI system components. It represents the central nervous system of the AMI system.
Analytic DB	Data warehouse that stores time stamped information about the state of the electric grid.
DAC - Ops/Regnl	Distribution Application Control system hosted in a Utilities Regional Operation Center to run a specific Distribution application
DAC - sub	Distribution Application Control system hosted in a Distribution Substation to run a specific Distribution application
DAPjm	This is the Data Aggregation Point on the NAN. It is essentially the point of convergence for all communication between SG devices and utility back office systems. In this specific use case it provides a communication conduit for AMI Smart Meters.
Distr. SCADA FEP	This device serves as the primary conduit for issuing commands from DMS/SCADA and receiving information from field devices deployed with in the Distribution network.
DMS	Distribution Management System - A system that monitors, manages and controls the electric distribution system.
FAN gateway - field	Field Area Network gateway device located in the distribution grid that provides the interface between the Feeder Line device communication modules and the Substation network connection.
FAN gateway - sub	Field Area Network gateway device located in the substation that provides the interface between the Feeder Line device communication modules and the Substation network connection.
Feeder Cap Bank	An Intelligent Electronic Device that provides electronic analog performance information, status and fault information. In addition, the device can be remotely controlled in order to increase voltage on a given segment of the Distribution network
Feeder Circuit Breaker	A device used in the substation that is used per a specific configuration to protect distribution equipment.
Feeder Recloser	A device used to sense fault conditions on a distribution line and trip open to provide protection. It is typically programmed to automatically close (re-close) after a period of time to test if the fault has cleared. After several attempts of reclosing the device locks out.
Feeder Regulator	These devices are deployed at critical points within the Distribution network for purposes of regulating voltage and providing system telemetry regarding the performance of the electric system.
Feeder Sectionalizer	A type of Feeder Switch that is used in tandem with other switches.
Feeder Sensor	An Intelligent Electronic Device that provides electronic analog performance information, status and fault information.
Feeder Switch	These devices are deployed at critical points within the Distribution network for purposes of isolating electric faults and providing system telemetry regarding the performance of the electric system.
Internet / Extranet gateway(s) – Utility	These are gateways used to connect internal utility networks with external networks.
OMS	A system that receives power system outage notifications and correlates the geographic location of the power outage
RTU	Remote Terminal Unit - Aggregator of multiple serialized devices to a common telecommunications interface

5.4.1.4 Distribution System Monitoring and Maintenance

5.4.1.4.1 Overview

Physical distribution devices require maintenance procedures to make sure that the equipment is functioning properly. These procedures can include self-diagnostics on equipment, poling equipment at scheduled intervals, and reading sensor data to monitor equipment conditions. There are several devices that fall into this category. The term Feeder Line Device is used to represent any of the following in this monitoring use case:

- Capacitor Bank Controller (CBC)
- Fault Detector
- Recloser
- Line Sensor
- Switch
- Voltage Regulator

724 ##### 5.4.1.4.1.1 Applicable Payload Information

Payload Name	Description	CSWG LICs	C-I-A	Confidentiality	Integrity	Availability
FeederCapBank_alarm	feeder Capacitor Bank has detected and sends an alarm notification	2, 4	L-H-H	None to minimal harm to customer or organization for access to/disclosure of payload data	Incorrect device ID and alarm code could cause the distribution grid to malfunction in a dangerous manner potentially causing severe impact (if coupled with multiple other circuit regulator & voltage sensor value anomalies and if in-scale) to the Utility and the Customer financials	Latent and un-reliable connections could cause the operation requested to seriously harm (if coupled with multiple other circuit regulator & voltage sensor value anomalies and if in-scale) the electric network
FeederCapBank_deviation_alert	feeder Capacitor Bank has detected and sends a measured value has gone out of the tolerance band alert	2, 4	L-H-H	None to minimal harm to customer or organization for access to/disclosure of payload data	Incorrect device ID and alert code could cause the distribution grid to malfunction in a severe (if coupled with multiple other circuit regulator & voltage sensor value anomalies and if follow-up circuit device stats request not implemented and if in-scale) and dangerous manner potentially causing the Utility and the Customer financial impact	Latent and un-reliable connections could cause the operation requested to severely harm (if coupled with multiple other circuit regulator & voltage sensor value anomalies and if follow-up circuit device stats request not implemented and if in-scale) the electric network
FeederCapBank_Operate_failure	Message to indicate device failure	2, 4	L-H-H	None to minimal harm to customer or organization for access to/disclosure of payload data	Incorrect device ID and failure code could cause the distribution grid to malfunction in a dangerous manner potentially causing the Utility and the Customer financial impact (if coupled with multiple other circuit regulator & voltage sensor value anomalies and if follow-up circuit device stats request not implemented and if in-scale)	Latent and un-reliable connections could cause the operation requested to harm the electric network causing serious up to severe impact (if coupled with multiple other circuit regulator & voltage sensor value anomalies and if follow-up circuit device stats request not implemented and if in-scale)
FeederCapBank_sensor_data_cmd	Query for sensor data	2, 4	L-H-M	None to minimal harm to customer or organization for access to/disclosure of payload data	Incorrect device ID and command code could cause the distribution grid to malfunction in a dangerous manner potentially causing the Utility and the Customer financial impact, (if coupled with multiple other circuit regulator & voltage sensor value anomalies and if follow-up circuit device stats request not implemented and if in-scale)	Latent and un-reliable connections could cause the operator of the network to not understand the state of the electric grid

Payload Name	Description	CSWG LICs	C-I-A	Confidentiality	Integrity	Availability
FeederCapBank_sensor_data_resp-data	sensor data response from feeder Capacitor Bank Controller	2, 4	L-H-M	None to minimal harm to customer or organization for access to/disclosure of payload data	Incorrect device ID and response data could cause the distribution grid to malfunction in a dangerous manner potentially causing the Utility and the Customer financial impact, (if coupled with multiple other circuit regulator & voltage sensor value anomalies and if follow-up circuit device stats request not implemented and if in-scale)	Latent and un-reliable connections could cause the operator of the network to not understand the state of the electric grid
FeederCapBank_status_change_alert	feeder Capacitor Bank detects and sends device state change alert	2, 4	L-H-H	None to minimal harm to customer or organization for access to/disclosure of payload data	Incorrect device ID and alert code could cause the distribution grid to malfunction in a dangerous manner potentially causing the Utility and the Customer financial impact, (if coupled with multiple other circuit regulator & voltage sensor value anomalies and if follow-up circuit device stats request not implemented and if in-scale)	Latent and un-reliable connections could cause the operation requested to harm the electric network causing serious up to severe impact (if coupled with multiple other circuit regulator & voltage sensor value anomalies and if follow-up circuit device stats request not implemented and if in-scale)
FeederCapBank_status_cmd	Command to feeder Capacitor Bank to query device status	2, 4	L-H-M	None to minimal harm to customer or organization for access to/disclosure of payload data	Incorrect device ID and query code could cause the distribution grid to malfunction in a dangerous manner potentially causing the Utility and the Customer financial impact, (if coupled with multiple other circuit regulator & voltage sensor value anomalies and if follow-up circuit device stats request not implemented and if in-scale)	Latent and un-reliable connections could cause the operator of the network to not understand the state of the electric grid
FeederCapBank_status_resp-data	feeder Capacitor Bank response data to device status query	2, 4	L-H-M	None to minimal harm to customer or organization for access to/disclosure of payload data	Incorrect device ID and response data could cause the distribution grid to malfunction in a dangerous manner potentially causing the Utility and the Customer financial impact, (if coupled with multiple other circuit regulator & voltage sensor value anomalies and if follow-up circuit device stats request not implemented and if in-scale)	Latent and un-reliable connections could cause the operator of the network to not understand the state of the electric grid

Payload Name	Description	CSWG LICs	C-I-A	Confidentiality	Integrity	Availability
FeederFault_Detector_alarm	feeder fault detection device senses a fault and sends a fault alarm	2, 4	L-H-H	None to minimal harm to customer or organization for access to/disclosure of payload data	Incorrect device ID and alarm code could cause the distribution grid to be operated in a dangerous/severe manner potentially causing the Utility and the Customer severe financial impact (if not recognized and coupled with multiple sensor value anomalies and if in-scale)	Latent and un-reliable connections could cause follow-up grid operations to potentially severely harm the electric grid, (if not recognized and coupled with other multiple sensor value anomalies and if in-scale)
FeederFault_Detector_deviation_alert	feeder fault detection device senses and sends a measured value has gone out of the tolerance band alert	2, 4	L-H-H	None to minimal harm to customer or organization for access to/disclosure of payload data	Incorrect device ID and alert code could cause the distribution grid to be operated in a dangerous/severe manner potentially causing the Utility and the Customer severe financial impact (if not recognized and coupled with other multiple sensor value anomalies and if in-scale)	Latent and un-reliable connections could cause follow-up grid operations to potentially severely harm the electric grid, (if not recognized and coupled with other multiple sensor value anomalies and if in-scale)
FeederFault_Detector_sensor_data_cmd	Query for feeder fault detector device sensor data	2, 4	L-H-M	None to minimal harm to customer or organization for access to/disclosure of payload data	Incorrect device ID and command code could cause the distribution grid to malfunction in a dangerous/severe manner potentially causing the Utility and the Customer severe financial impact	Latent and un-reliable connections could cause the operator of the network to not understand the state of the electric grid and may lead to serious incorrect electric grid operations
FeederFault_Detector_sensor_data_resp-data	sensor data response from feeder fault detector	2, 4	L-H-M	None to minimal harm to customer or organization for access to/disclosure of payload data	Incorrect device ID and response data could cause the distribution grid to malfunction in a dangerous/severe manner potentially causing the Utility and the Customer severe financial impact	Latent and un-reliable connections could cause the operator of the network to not understand the state of the electric grid and may lead to serious incorrect electric grid operations
FeederFault_Detector_status_change_alert	feeder Fault Detector detects and sends device state change alert	2, 4	L-H-H	None to minimal harm to customer or organization for access to/disclosure of payload data	Incorrect device ID and alert code could cause the distribution grid to be operated in a dangerous/severe manner potentially causing the Utility and the Customer severe financial impact (if not recognized and coupled with other multiple sensor value anomalies and if in-scale)	Latent and un-reliable connections could cause follow-up grid operations to potentially severely harm the electric grid, (if not recognized and coupled with other multiple sensor value anomalies and if in-scale)

Payload Name	Description	CSWG LICs	C-I-A	Confidentiality	Integrity	Availability
FeederFault_Detector_status_cmd	command to check status of feeder Fault Detector	2, 4	L-H-M	None to minimal harm to customer or organization for access to/disclosure of payload data	Incorrect device ID and query operation could cause the distribution grid to malfunction in a dangerous/severe manner potentially causing the Utility and the Customer severe financial impact	Latent and un-reliable connections could cause the operator of the network to not understand the state of the electric grid and may lead to serious incorrect electric grid operations
FeederFault_Detector_status_resp-data	feeder Fault Detector response data to device status query	2, 4	L-H-M	None to minimal harm to customer or organization for access to/disclosure of payload data	Incorrect device ID condition and history could cause the distribution grid to malfunction in a dangerous/severe manner potentially causing the Utility and the Customer severe financial impact	Latent and un-reliable connections could cause the operator of the network to not understand the state of the electric grid and may lead to serious incorrect electric grid operations
FeederRecloser_alarm	Alarm message to SCADA system	2, 4	L-H-H	None to minimal harm to customer or organization for access to/disclosure of payload data	Incorrect device ID and alarm code could cause the distribution grid to malfunction in a dangerous/severe manner potentially causing the Utility and the Customer severe financial impact	Latent and un-reliable connections could cause the operation requested to harm the electric network and may lead to severe incorrect electric grid operations
FeederRecloser_deviation_alert	Alert message to SCADA system	2, 4	L-H-H	None to minimal harm to customer or organization for access to/disclosure of payload data	Incorrect device ID and alert code could cause the distribution grid to malfunction in a dangerous/severe manner potentially causing the Utility and the Customer severe financial impact	Latent and un-reliable connections could cause the operation requested to harm the electric network and may lead to severe incorrect electric grid operations
FeederRecloser_Operate_failure	Message to indicate device failure	2, 4	L-H-H	None to minimal harm to customer or organization for access to/disclosure of payload data	Incorrect device ID and failure code could cause the distribution grid to malfunction in a dangerous/severe manner potentially causing the Utility and the Customer severe financial impact	Latent and un-reliable connections could cause the operation requested to harm the electric network and may lead to severe incorrect electric grid operations
FeederRecloser_sensor_data_cmd	Query to sensor data	2, 4	L-H-M	None to minimal harm to customer or organization for access to/disclosure of payload data	Incorrect device ID and command code could cause the distribution grid to malfunction in a dangerous/severe manner potentially causing the Utility and the Customer severe financial impact (if situation not recognized quickly)	Latent and un-reliable connections could cause the operator of the network to not understand the state of the electric grid and lead to serious missed operations (if not recognized quickly)

Payload Name	Description	CSWG LICs	C-I-A	Confidentiality	Integrity	Availability
FeederRecloser_sensor_data_resp-data	Response from recloser	2, 4	L-H-M	None to minimal harm to customer or organization for access to/disclosure of payload data	Incorrect device ID and response data could cause the distribution grid to malfunction in a dangerous/severe manner potentially causing the Utility and the Customer severe financial impact (if not recognized quickly)	Latent and un-reliable connections could cause the operator of the network to not understand the state of the electric grid and lead to serious missed operations (if not recognized quickly)
FeederRecloser_status_change_alert	Alert message to SCADA system	2, 4	L-H-H	None to minimal harm to customer or organization for access to/disclosure of payload data	Incorrect device ID and alert code could cause the distribution grid to malfunction in a dangerous/severe manner potentially causing the Utility and the Customer severe financial impact	Latent and un-reliable connections could cause the operator of the network to not understand the state of the electric grid and may lead to severe incorrect electric grid operations
FeederRecloser_status_cmd	Command to recloser to query status	2, 4	L-H-M	None to minimal harm to customer or organization for access to/disclosure of payload data	Incorrect device ID and query code could cause the distribution grid to malfunction in a dangerous/severe manner potentially causing the Utility and the Customer severe financial impact (if not recognized quickly)	Latent and un-reliable connections could cause the operator of the network to not understand the state of the electric grid and lead to serious missed operations (if not recognized)
FeederRecloser_status_resp-data	response to recloser query status	2, 4	L-H-M	None to minimal harm to customer or organization for access to/disclosure of payload data	Incorrect device ID and response data could cause the distribution grid to malfunction in a dangerous/severe manner potentially causing the Utility and the Customer severe financial impact (if not recognized quickly)	Latent and un-reliable connections could cause the operator of the network to not understand the state of the electric grid and lead to serious missed operations (if not recognized)
FeederRegulator_alarm	Alarm message to SCADA system	2, 4	L-M-H	None to minimal harm to customer or organization for access to/disclosure of payload data	Incorrect device ID and alarm code could cause the distribution grid to malfunction in a dangerous manner potentially causing the Utility and the Customer serious financial impact (if not recognized and coupled with multiple other Cap Bank, voltage sensor value anomalies and if in-scale)	Latent and un-reliable connections could cause the operator of the network to not understand the state of the electric grid and incorrect serious operation of the grid (if not recognized and coupled with multiple other Cap Bank, voltage sensor value anomalies and if in-scale)

Payload Name	Description	CSWG LICs	C-I-A	Confidentiality	Integrity	Availability
FeederRegulator_deviation_alert	Alert to SCADA system	2, 4	L-M-M	None to minimal harm to customer or organization for access to/disclosure of payload data	Incorrect device ID and alert code could cause the distribution grid to malfunction in a dangerous/serious manner potentially causing the Utility and the Customer serious financial impact (if not recognized and coupled with multiple other Cap Bank, voltage sensor value anomalies and if in-scale)	Latent and un-reliable connections could cause the operator of the network to not understand the state of the electric grid and incorrect serious operation of the grid (if not recognized and coupled with multiple other Cap Bank, voltage sensor value anomalies and if in-scale)
FeederRegulator_Operate_failure	Alert to SCADA system	2, 4	L-M-H	None to minimal harm to customer or organization for access to/disclosure of payload data	Incorrect device ID and alarm code could cause the distribution grid to malfunction in a dangerous/serious manner potentially causing the Utility and the Customer serious financial impact (if not recognized and coupled with multiple other Cap Bank, voltage sensor value anomalies and if in-scale)	Latent and un-reliable connections could cause the operator of the network to not understand the state of the electric grid and incorrect severe operation of the grid (if not recognized and coupled with multiple other Cap Bank, voltage sensor value anomalies and if in-scale)
FeederRegulator_sensor_data_cmd	Command to query sensor data	2, 4	L-L-M	None to minimal harm to customer or organization for access to/disclosure of payload data	Incorrect device ID and command code could cause the distribution grid to malfunction in a dangerous manner potentially causing the Utility and the Customer financial impact	Latent and un-reliable connections could cause the operator of the network to not understand the state of the electric grid and serious incorrect operation of the grid (if not recognized and coupled with multiple other Cap Bank, voltage sensor value anomalies and if in-scale)
FeederRegulator_sensor_data_resp-data	response from sensor	2, 4	L-L-M	None to minimal harm to customer or organization for access to/disclosure of payload data	Incorrect device ID and response data could cause the distribution grid to malfunction in a dangerous but minimal manner potentially causing the Utility and the Customer financial impact	Latent and un-reliable connections could cause the operator of the network to not understand the state of the electric grid and serious incorrect operation of the grid (if not recognized and coupled with multiple other Cap Bank, voltage sensor value anomalies and if in-scale)

Payload Name	Description	CSWG LICs	C-I-A	Confidentiality	Integrity	Availability
FeederRegulator_status_change_alert	Alert to SCADA system	2, 4	L-H-H	None to minimal harm to customer or organization for access to/disclosure of payload data	Incorrect device ID and alert code could cause the distribution grid to malfunction in a dangerous/severe manner potentially causing the Utility and the Customer severe financial impact (if not recognized and coupled with multiple other Cap Bank, voltage sensor value anomalies and if in-scale)	Latent and un-reliable connections could cause the operation requested to severely harm the electric network and incorrect severe operation of the grid (if not recognized and coupled with multiple other Cap Bank, voltage sensor value anomalies and if in-scale)
FeederRegulator_status_cmd	Query Regulator status	2, 4	L-L-M	None to minimal harm to customer or organization for access to/disclosure of payload data	Incorrect device ID and command code could cause the distribution grid to malfunction in a dangerous manner potentially causing the Utility and the Customer financial impact	Latent and un-reliable connections could cause the operator of the network to not understand the state of the electric grid and incorrect serious operation of the grid (if not recognized and coupled with multiple other Cap Bank, voltage sensor value anomalies and if in-scale)
FeederRegulator_status_resp-data	Regulator Status response	2, 4	L-H-M	None to minimal harm to customer or organization for access to/disclosure of payload data	Incorrect device ID and response data could cause the distribution grid to malfunction in a dangerous/severe manner potentially causing the Utility and the Customer severe financial impact (if not recognized and coupled with multiple other Cap Bank, voltage sensor value anomalies and if in-scale)	Latent and un-reliable connections could cause the operator of the network to not understand the state of the electric grid and incorrect serious operation of the grid (if not recognized and coupled with multiple other Cap Bank, voltage sensor value anomalies and if in-scale)
FeederSensor_alarm	Alarm message to SCADA system	2, 4	L-M-M	None to minimal harm to customer or organization for access to/disclosure of payload data	Incorrect device ID and alarm code could cause the distribution grid to malfunction in a dangerous manner potentially causing the Utility and the Customer financial impact (if coupled with multiple other Cap Bank, Regulator sensor value anomalies and if in-scale)	Latent and un-reliable connections could cause the operation requested to seriously harm the electric network (if not recognized and coupled with multiple other Cap Bank, Regulator sensor value anomalies and if in-scale)

Payload Name	Description	CSWG LICs	C-I-A	Confidentiality	Integrity	Availability
FeederSensor_deviation_alert	feeder Sensor has detected and sends a measured value has gone out of the tolerance band alert	2, 4	L-M-M	None to minimal harm to customer or organization for access to/disclosure of payload data	Incorrect device ID and alert code could cause the distribution grid to malfunction in a dangerous manner potentially causing the Utility and the Customer serious financial impact, (if not recognized and coupled with multiple other Cap Bank, Regulator sensor value anomalies and if in-scale)	Latent and un-reliable connections could cause the operator of the network to not understand the state of the electric grid and lead to serious operations (if not recognized and coupled with multiple other Cap Bank, Regulator sensor value anomalies and if in-scale)
FeederSensor_sensor_data_cmd	Command to query sensor data	2, 4	L-M-M	None to minimal harm to customer or organization for access to/disclosure of payload data	Incorrect device ID and command code could cause the distribution grid to malfunction in a dangerous manner potentially causing the Utility and the Customer serious financial impact (if not recognized and coupled with multiple other Cap Bank, Regulator sensor value anomalies and if in-scale)	Latent and un-reliable connections could cause the operator of the network to not understand the state of the electric grid and lead to serious missed operations (if not recognized and coupled with multiple other Cap Bank, Regulator sensor value anomalies and if in-scale)
FeederSensor_sensor_data_resp-data	Response to Sensor query	2, 4	L-M-M	None to minimal harm to customer or organization for access to/disclosure of payload data	Incorrect device ID and response data could cause the distribution grid to malfunction in a dangerous manner potentially causing the Utility and the Customer serious financial impact (if not recognized and coupled with multiple other Cap Bank, Regulator sensor value anomalies and if in-scale)	Latent and un-reliable connections could cause the operator of the network to not understand the state of the electric grid and lead to serious incorrect operation of the grid (if not recognized and coupled with multiple other Cap Bank, Regulator sensor value anomalies and if in-scale)
FeederSensor_status_change_alert	Alert to SCADA system	2, 4	L-H-H	None to minimal harm to customer or organization for access to/disclosure of payload data	Incorrect device ID and alert code could cause the distribution grid to malfunction in a dangerous manner potentially causing the Utility and the Customer severe financial impact (if not recognized and coupled with multiple other Cap Bank, Regulator sensor value anomalies and if in-scale)	Latent and un-reliable connections could cause the operator of the network to not understand the state of the electric grid of the grid and lead to severe incorrect operation (if not recognized and coupled with multiple other Cap Bank, Regulator sensor value anomalies and if in-scale)

Payload Name	Description	CSWG LICs	C-I-A	Confidentiality	Integrity	Availability
FeederSensor_status_cmd	Command to sensor for status	2, 4	L-M-M	None to minimal harm to customer or organization for access to/disclosure of payload data	Incorrect device ID and command code could cause the distribution grid to malfunction in a dangerous manner potentially causing the Utility and the Customer serious financial impact (if not recognized and coupled with multiple other Cap Bank, Regulator sensor value anomalies and if in-scale)	Latent and un-reliable connections could cause the operator of the network to not understand the state of the electric grid and may lead to incorrect operation of the grid (if not recognized and coupled with multiple other Cap Bank, Regulator sensor value anomalies and if in-scale)
FeederSensor_status_resp-data	Response to sensor status request	2, 4	L-M-M	None to minimal harm to customer or organization for access to/disclosure of payload data	Incorrect device ID and sensor status could cause the distribution grid to malfunction in a dangerous manner potentially causing the Utility and the Customer serious financial impact (if not recognized and coupled with multiple other Cap Bank, Regulator sensor value anomalies and if in-scale)	Latent and un-reliable connections could cause the operator of the network to not understand the state of the electric grid and incorrect operation of the grid (if not recognized and coupled with multiple other Cap Bank, Regulator sensor value anomalies and if in-scale)
FeederSwitch_alarm	Alarm message to SCADA system	2, 4	L-H-H	None to minimal harm to customer or organization for access to/disclosure of payload data	Incorrect device ID and alarm code could cause the distribution grid to malfunction in a dangerous/severe manner potentially causing the Utility and the Customer severe financial impact	Latent and un-reliable connections could cause the operation requested to severely harm the electric network
FeederSwitch_deviation_alert	Alert to SCADA system	2, 4	L-H-H	None to minimal harm to customer or organization for access to/disclosure of payload data	Incorrect device ID and alert code could cause the distribution grid to malfunction in a dangerous/severe manner potentially causing the Utility and the Customer severe financial impact	Latent and un-reliable connections could cause the operator of the network to not understand the state of the electric grid and incorrectly operate the grid in a dangerous/severe manner
FeederSwitch_Operate_failure	Alarm message to SCADA system	2, 4	L-H-H	None to minimal harm to customer or organization for access to/disclosure of payload data	Incorrect device ID and alarm code could cause the distribution grid to malfunction in a dangerous/severe manner potentially causing the Utility and the Customer severe financial impact (if not recognized quickly)	Latent and un-reliable connections could cause the operation requested to severely harm the electric network (if not recognized quickly)
FeederSwitch_sensor_data_cmd	Query to switch for data	2, 4	L-H-M	None to minimal harm to customer or organization for access to/disclosure of payload data	Incorrect device ID and command code could cause the distribution grid to malfunction in a severe dangerous manner potentially causing the Utility and the Customer severe financial impact	Latent and un-reliable connections could cause the operator of the network to not understand the state of the electric grid and may lead to serious incorrect electric grid operations

Payload Name	Description	CSWG LICs	C-I-A	Confidentiality	Integrity	Availability
FeederSwitch_sensor_data_resp-data	Response for switch sensor	2, 4	L-H-M	None to minimal harm to customer or organization for access to/disclosure of payload data	Incorrect device ID and response data could cause the distribution grid to malfunction in a dangerous/severe manner potentially causing the Utility and the Customer severe financial impact	Latent and un-reliable connections could cause the operator of the network to not understand the state of the electric grid and may lead to serious incorrect electric grid operations
FeederSwitch_status_change_alert	Alert to SCADA system	2, 4	L-H-H	None to minimal harm to customer or organization for access to/disclosure of payload data	Incorrect device ID and alert code could cause the distribution grid to malfunction in a dangerous/severe manner potentially causing the Utility and the Customer severe financial impact	Latent and un-reliable connections could cause the operator of the network to not understand the state of the electric grid and incorrect dangerous/severe operation of the grid
FeederSwitch_status_cmd	Query to feeder switch for status	2, 4	L-H-M	None to minimal harm to customer or organization for access to/disclosure of payload data	Incorrect device ID and command code could cause the distribution grid to malfunction in a dangerous/severe manner potentially causing the Utility and the Customer severe financial impact	Latent and un-reliable connections could cause the operator of the network to not understand the state of the electric grid and incorrect dangerous/serious operation of the grid
FeederSwitch_status_resp-data	Switch status response	2, 4	L-H-M	None to minimal harm to customer or organization for access to/disclosure of payload data	Incorrect device ID and response data could cause the distribution grid to malfunction in a dangerous/severe manner potentially causing the Utility and the Customer severe financial impact	Latent and un-reliable connections could cause the operator of the network to not understand the state of the electric grid and incorrect dangerous/serious operation of the grid

5.4.1.4.1.2 Scenario: Feeder Line Device Alarm

Narrative

The Feeder Line Device sends an alarm to SCADA that is operating improperly.

Business Objectives

Payload Name	Payload Type	Payload Attributes	PAP02 Baseload (routine)	PAP02 Highload (full load)	Originating Actor	Destination Actor	Reliability	Latency	When	How Often	Payload Size
FeederCapBank_alarm	alarm	device ID, alarm code	X	X	Feeder Cap Bank	DMS	> 99.5%	< 5 sec	24x7	1 per | fdrCB per | week	50
FeederFault_Detector_alarm	alarm	device ID, alarm code	X	X	Feeder Sensor	DMS	> 99.5%	< 5 sec	24x7	1 per | Fault-Detector-fdrFS per | week	50
FeederRecloser_alarm	alarm	device ID, alarm code	X	X	Feeder Recloser	DMS	> 99.5%	< 5 sec	24x7	1 per | fdrRC per | week	50
FeederRegulator_alarm	alarm	device ID, alarm code	X	X	Feeder Regulator	DMS	> 99.5%	< 5 sec	24x7	1 per | fdrVR per | week	100
FeederSensor_alarm	alarm	device ID, alarm code	X	X	Feeder Sensor	DMS	> 99%	< 5 sec	24x7	1 per | fdrFS per | day	50
FeederSwitch_alarm	alarm	device ID, alarm code	X	X	Feeder Switch	DMS	> 99.5%	< 5 sec	24x7	1 per | fdrSW per | week	50

5.4.1.4.1.3 Scenario: Feeder Line Device Deviation Alert

Narrative

The Feeder Line Device sends an alarm to SCADA that is operating outside of its normal boundaries. An example of this would be the system voltage drops under a predetermined level.

Business Objectives

Payload Name	Payload Type	Payload Attributes	PAP02 Baseload (routine)	PAP02 Highload (full load)	Originating Actor	Destination Actor	Reliability	Latency	When	How Often	Payload Size
FeederCapBank_deviation_alert	alert	device ID, alert code	X	X	Feeder Cap Bank	DMS	> 99.5%	< 5 sec	24x7	1 per | fdrCB per | 12 hours	50
FeederFault_Detector_deviation_alert	alert	device ID, alert code	X	X	Feeder Sensor	DMS	> 99.5%	< 5 sec	24x7	1 per | Fault-Detector-fdrFS per | week	50
FeederRecloser_deviation_alert	alert	device ID, alert code	X	X	Feeder Recloser	DMS	> 99.5%	< 5 sec	24x7	1 per | fdrRC per | day	50
FeederRegulator_deviation_alert	alert	device ID, alert code	X	X	Feeder Regulator	DMS	> 99.5%	< 5 sec	24x7	1 per | fdrVR per | hour	100
FeederSensor_deviation_alert	alert	device ID, alert code	X	X	Feeder Sensor	DMS	> 99.5%	< 5 sec	24x7	1 per | fdrFS per | hour	50
FeederSwitch_deviation_alert	alert	device ID, alert code	X	X	Feeder Switch	DMS	> 99.5%	< 5 sec	24x7	1 per | fdrSW per | day	50

5.4.1.4.1.4 Scenario: Feeder Line Device Operate Failure

Narrative

The Feeder Line Device sends an alarm to SCADA that is has failed to operate. An example would be that the unit tries to open or close and is unable to do so because of a physical malfunction of the control linkage.

Business Objectives

Payload Name	Payload Type	Payload Attributes	PAP02 Baseload (routine)	PAP02 Highload (full load)	Originating Actor	Destination Actor	Reliability	Latency	When	How Often	Payload Size
FeederCapBank_Operate_failure	alarm	device ID, failure code	X	X	Feeder Cap Bank	DMS	> 99.5%	< 5 sec	24x7	1 per | fdrCB per | month	50
FeederRecloser_Operate_failure	alarm	device ID, failure code	X	X	Feeder Recloser	DMS	> 99.5%	< 5 sec	24x7	1 per | fdrRC per | month	50
FeederRegulator_Operate_failure	alarm	device ID, alarm code	X	X	Feeder Regulator	DMS	> 99.5%	< 5 sec	24x7	1 per | fdrVR per | month	100
FeederSwitch_Operate_failure	alarm	device ID, alarm code	X	X	Feeder Switch	DMS	> 99.5%	< 5 sec	24x7	1 per | fdrSW per | month	50

5.4.1.4.1.5 Scenario: Feeder Line Device Sensor Data Acquisition

Narrative

SCADA sends a command to the Feeder Line Device in order to retrieve sensor data. This can be used to determine physical conditions of the unit.

NOTE: This scenario is also used for in the Distribution System Demand Response use case and for that use case, the Reliability, Latency, and How Often metrics are different. The differences for Distribution System Demand Response Latency, When, and How Often requirements are highlighted in yellow in the table below. For more information, please see the requirements spreadsheet.

Business Objectives

Payload Name	Payload Type	Payload Attributes	PAP02 Baseload (routine)	PAP02 Highload (full load)	Originating Actor	Destination Actor	Reliability	Latency	When	How Often	Payload Size
FeederCapBank_sensor_data_cmd	cmd	device ID, command code	X - DA Maint	X	DMS	Feeder Cap Bank	> 99.5%	< 5 sec, < 4 sec	24x7, 1-6 hr duration, 4-8 times a year	1 per | fdrCB per | hour, 1 per | fdrCB per | 15 min	50
FeederCapBank_sensor_data_resp-data	resp-data	device ID, response data	X - DA Maint	X	Feeder Cap Bank	DMS	> 99.5%	< 5 sec, < 4 sec	24x7, 1-6 hr duration, 4-8 times a year	1 per | fdrCB per | hour, 1 per | fdrCB per | 15 min	100
FeederFault_Detector_sensor_data_cmd	cmd	device ID, command code	X	X	DMS	Feeder Sensor	> 99.5%	< 5 sec	24x7	1 per | Fault-Detector-fdrFS per | week	100
FeederFault_Detector_sensor_data_resp-data	resp-data	device ID, response data	X	X	Feeder Sensor	DMS	> 99.5%	< 5 sec	24x7	1 per | Fault-Detector-fdrFS per | week	1000
FeederRecloser_sensor_data_cmd	cmd	device ID, command code	X	X	DMS	Feeder Recloser	> 99.5%	< 5 sec	24x7	1 per | fdrRC per | 12 hours	100
FeederRecloser_sensor_data_resp-data	resp-data	device ID, response data	X	X	Feeder Recloser	DMS	> 99.5%	< 5 sec	24x7	1 per | fdrRC per | 12 hours	100

Payload Name	Payload Type	Payload Attributes	PAP02 Baseload (routine)	PAP02 Highload (full load)	Originating Actor	Destination Actor	Reliability	Latency	When	How Often	Payload Size
FeederRegulator_sensor_data_cmd	cmd	device ID, command code	X - DA Maint	X	DMS	Feeder Regulator	> 99.5%	< 5 sec, < 4 sec	24x7, 1-6 hr duration, 4-8 times a year	1 per | fdrVR per | hour, 1 per | fdrVR per | 15 min	150
FeederRegulator_sensor_data_resp-data	resp-data	device ID, response data	X - DA Maint	X	Feeder Regulator	DMS	> 99.5%	< 5 sec, < 4 sec	24x7, 1-6 hr duration, 4-8 times a year	1 per | fdrVR per | hour, 1 per | fdrVR per | 15 min	1000
FeederSensor_sensor_data_cmd	cmd	device ID, sensor data	X - DA Maint	X	DMS	Feeder Sensor	> 99.5%	< 4 sec	24x7, 1-6 hr duration, 4-8 times a year	1 per | fdrFS per | 5 sec, 1 per | fdrFS per | 15 min	150
FeederSensor_sensor_data_resp-data	resp-data	device ID, response data	X - DA Maint	X	Feeder Sensor	DMS	> 99.5%	< 4 sec	24x7, 1-6 hr duration, 4-8 times a year	1 per | fdrFS per | 5 sec, 1 per | fdrFS per | 15 min	250
FeederSwitch_sensor_data_cmd	cmd	device ID, command code	X - DA Maint	X	DMS	Feeder Switch	> 99.5%	< 5 sec, < 4 sec	24x7, 1-6 hr duration, 4-8 times a year	1 per | fdrSW per | 12 hours, 1 per | fdrSW per | 15 min	50
FeederSwitch_sensor_data_resp-data	resp-data	device ID, response data	X - DA Maint	X	Feeder Switch	DMS	> 99.5%	< 5 sec, < 4 sec	24x7, 1-6 hr duration, 4-8 times a year	1 per | fdrSW per | 12 hours, 1 per | fdrSW per | 15 min	100

5.4.1.4.1.6 Scenario: Feeder Line Device Status Change Alert

Narrative

The Feeder Line Device sends a message to SCADA notifying the system that there has been a status change that's either intentional or caused by a failure.

Business Objectives

Payload Name	Payload Type	Payload Attributes	PAP02 Baseload (routine)	PAP02 Highload (full load)	Originating Actor	Destination Actor	Reliability	Latency	When	How Often	Payload Size
FeederCapBank_status_change_alert	alert	device ID, alert code	X	X	Feeder Cap Bank	DMS	> 99.5%	< 5 sec	24x7	1 per | fdrCB per | 12 hours	50
FeederFault_Detector_status_change_alert	alert	device ID, alert code	X	X	Feeder Sensor	DMS	> 99.5%	< 5 sec	24x7	1 per | Fault-Detector-fdrFS per | week	1000
FeederRecloser_status_change_alert	alert	device ID, alert code	X	X	Feeder Recloser	DMS	> 99.5%	< 5 sec	24x7	1 per | fdrRC per | day	250
FeederRegulator_status_change_alert	alert	device ID, alert code	X	X	Feeder Regulator	DMS	> 99.5%	< 5 sec	24x7	1 per | fdrVR per | hour	100
FeederSensor_status_change_alert	alert	device ID, alert code	X	X	Feeder Sensor	DMS	> 99.5%	< 5 sec	24x7	1 per | fdrFS per | hour	50
FeederSwitch_status_change_alert	alert	device ID, alert code	X	X	Feeder Switch	DMS	> 99.5%	< 5 sec	24x7	1 per | fdrSW per | day	50

5.4.1.4.1.7 Scenario: Feeder Line Device Sensor Data Maintenance

Narrative

SCADA sends a command to the Feeder Line Device in order to get the devices status/state (e.g. Open/Closed, active/deactive, etc).

Business Objectives

Payload Name	Payload Type	Payload Attributes	PAP02 Baseload (routine)	PAP02 Highload (full load)	Originating Actor	Destination Actor	Reliability	Latency	When	How Often	Payload Size
FeederCapBank_status_cmd	cmd	device ID, query code	X	X	DMS	Feeder Cap Bank	> 99.5%	< 5 sec	24x7	1 per | fdrCB per | 5 min	50
FeederCapBank_status_resp-data	resp-data	device ID, response data	X	X	Feeder Cap Bank	DMS	> 99.5%	< 5 sec	24x7	1 per | fdrCB per | 5 min	50
FeederFault_Detector_status_cmd	cmd	device ID, query operation	X	X	DMS	Feeder Sensor	> 99.5%	< 5 sec	24x7	1 per | Fault-Detector-fdrFS per | 4 hours	50
FeederFault_Detector_status_resp-data	resp-data	device ID, condition, history if available	X	X	Feeder Sensor	DMS	> 99.5%	< 5 sec	24x7	1 per | Fault-Detector-fdrFS per | 4 hours	50
FeederRecloser_status_cmd	cmd	device ID, query code	X	X	DMS	Feeder Recloser	> 99.5%	< 5 sec	24x7	1 per | fdrRC per | 4 hours	50
FeederRecloser_status_resp-data	resp-data	device ID, response data	X	X	Feeder Recloser	DMS	> 99.5%	< 5 sec	24x7	1 per | fdrRC per | 4 hours	50
FeederRegulator_status_cmd	cmd	device ID, command code	X	X	DMS	Feeder Regulator	> 99.5%	< 5 sec	24x7	1 per | fdrVR per | 5 min	50
FeederRegulator_status_resp-data	resp-data	device ID, response data	X	X	Feeder Regulator	DMS	> 99.5%	< 5 sec	24x7	1 per | fdrVR per | 5 min	50
FeederSensor_status_cmd	cmd	device ID, command code	X	X	DMS	Feeder Sensor	> 99.5%	< 4 sec	24x7	1 per | fdrFS per | 5 sec	50
FeederSensor_status_resp-data	resp-data	device ID, sensor status	X	X	Feeder Sensor	DMS	> 99.5%	< 4 sec	24x7	1 per | fdrFS per | 5 sec	50
FeederSwitch_status_cmd	cmd	device ID, command code	X	X	DMS	Feeder Switch	> 99.5%	< 5 sec	24x7	1 per | fdrSW per | 4 hours	50
FeederSwitch_status_resp-data	resp-data	device ID, response data	X	X	Feeder Switch	DMS	> 99.5%	< 5 sec	24x7	1 per | fdrSW per | 4 hours	50

5.4.1.5 Voltage and VAR Control

5.4.1.5.1 Overview

Voltage and VAR Management can reduce load while respecting given voltage tolerance (normal and emergency), conserve energy, reduce or eliminate overload in transmission lines, reduce or eliminate voltage violations on transmission lines, provide reactive power support for transmission/distribution bus, provide spinning reserve support, and/or minimize cost of energy. For the distribution system, telecommunications required for Voltage and VAR Management include monitoring of feeder line devices by polling or self-read at scheduled intervals (See Distribution System Monitoring), configuration or control of some of these feeder line devices, and can also include device deviations for operation outside of desired range. Voltage and VAR Management can be Centralized with the most requirements for telecommunications, or Distributed with the ability to coordinate between feeder line devices dependent on the amount of peer-to-peer telecommunications. Examples of feeder line devices for this use case include:

- Substation Sensor (on feeder circuit breaker or feeder bus)
- Capacitor Bank Controller (CBC)
- Recloser
- Line Sensor
- Switch
- Voltage Regulator

799 ##### 5.4.1.5.1.1 Applicable Payload Information

Payload Name	Description	CSWG LICs	C-I-A	Confidentiality	Integrity	Availability
FeederCapBank_close_ack	feeder Capacitor Bank has performed and sends a close operation acknowledgement	2, 4	L-H-M	None to minimal harm to customer or organization for access to/disclosure of payload data	Incorrect device ID and acknowledgement code could cause the distribution grid to malfunction in a seriously (if coupled with multiple other circuit regulator & voltage sensor value anomalies and follow-up device status request not implemented and if in-scale) dangerous manner potentially causing the Utility and the Customer financial impact	Latent and un-reliable connections could cause the operator of the network to not understand the state of the electric grid and seriously harm the electric network (if coupled with multiple other circuit regulator & voltage sensor value anomalies and if in-scale)
FeederCapBank_close_cmd	Command to close feeder Capacitor Bank	2, 4	L-H-M	None to minimal harm to customer or organization for access to/disclosure of payload data	Incorrect device ID and command code could cause the distribution grid to malfunction in a severe (if coupled with multiple other circuit regulator & voltage sensor value anomalies and if in-scale) and dangerous manner potentially causing the Utility and the Customer financial impact	Latent and un-reliable connections could cause the operator of the network to not be able to operate Feeder Capacitor bank controllers in a timely manner Prior to adding this functionality, crews were dispatched to operate these commands
FeederCapBank_new_config_ack	feeder Capacitor Bank has received, processed and sends a new configuration acknowledgement	2, 4	L-H-M	None to minimal harm to customer or organization for access to/disclosure of payload data	Incorrect device ID and acknowledgement code could cause the distribution grid to malfunction in a dangerous manner potentially causing serious to severe impact (if coupled with multiple other circuit regulator & voltage sensor value anomalies and if follow-up circuit device stats request not implemented and if in-scale) the Utility and the Customer financial impact	Latent and un-reliable connections could cause serious impact (if coupled with multiple other circuit regulator & voltage sensor value anomalies and if follow-up circuit device stats request not implemented and if in-scale) if the operator of the network does not understand the state of the electric grid

Payload Name	Description	CSWG LICs	C-I-A	Confidentiality	Integrity	Availability
FeederCapBank_new_config_cmd	Command to perform a feeder Capacitor Bank new configuration	2, 4	L-H-H	None to minimal harm to customer or organization for access to/disclosure of payload data	Incorrect device ID configuration information and configuration command could cause the distribution grid to malfunction in a dangerous manner potentially causing the Utility and the Customer financial impact (if coupled with multiple other circuit regulator & voltage sensor value anomalies and if follow-up circuit device stats request not implemented and if in-scale)	Latent and un-reliable connections could cause the operation requested to severely harm (if coupled with multiple other circuit regulator & voltage sensor value anomalies and if follow-up circuit device stats request not implemented and if in-scale) the electric network
FeederCapBank_open_ack	feeder Capacitor Bank has performed and sends an open operation acknowledgement	2, 4	L-H-H	None to minimal harm to customer or organization for access to/disclosure of payload data	Incorrect device ID and acknowledgement code could cause the distribution grid to malfunction in a dangerous manner potentially causing the Utility and the Customer financial impact (if coupled with multiple other circuit regulator & voltage sensor value anomalies and if follow-up circuit device stats request not implemented and if in-scale)	Latent and un-reliable connections could cause the operator of the network to not understand the state of the electric grid causing serious up to severe impact (if coupled with multiple other circuit regulator & voltage sensor value anomalies and if follow-up circuit device stats request not implemented and if in-scale)
FeederCapBank_open_cmd	Command to open feeder Capacitor Bank	2, 4	L-H-H	None to minimal harm to customer or organization for access to/disclosure of payload data	Incorrect device ID and command code could cause the distribution grid to malfunction in a dangerous manner potentially causing the Utility and the Customer financial impact (if coupled with multiple other circuit regulator & voltage sensor value anomalies and if follow-up circuit device stats request not implemented and if in-scale)	Latent and un-reliable connections could cause the operation requested to harm the electric network causing serious up to severe impact (if coupled with multiple other circuit regulator & voltage sensor value anomalies and if follow-up circuit device stats request not implemented and if in-scale)
FeederRecloser_new_config_ack	Acknowledgement of new configuration	2, 4	L-H-M	None to minimal harm to customer or organization for access to/disclosure of payload data	Incorrect device ID and acknowledgement code could cause the distribution grid to malfunction in a dangerous/severe manner potentially causing the Utility and the Customer severe financial impact	Latent and un-reliable connections could cause the operator of the network to not understand the state of the electric grid and may lead to severe incorrect electric grid operations

Payload Name	Description	CSWG LICs	C-I-A	Confidentiality	Integrity	Availability
FeederRecloser_new_config_cmd	Command to change configuration	2, 4	L-H-H	None to minimal harm to customer or organization for access to/disclosure of payload data	Incorrect device ID and configuration command could cause the distribution grid to malfunction in a dangerous/severe manner potentially causing the Utility and the Customer severe financial impact (if situation not recognized quickly)	Latent and un-reliable connections could cause the operation requested to harm the electric network and lead to severe missed operations (if not recognized quickly)
FeederRegulator_new_config_ack	Acknowledgement of new configuration	2, 4	L-H-M	None to minimal harm to customer or organization for access to/disclosure of payload data	Incorrect device ID and acknowledgement code could cause the distribution grid to malfunction in a dangerous/severe manner potentially causing the Utility and the Customer severe financial impact (if not recognized and coupled with multiple other Cap Bank, voltage sensor value anomalies and if in-scale)	Latent and un-reliable connections could cause the operator of the network to not understand the state of the electric grid and incorrect serious operation of the grid (if not recognized and coupled with multiple other Cap Bank, voltage sensor value anomalies and if in-scale)
FeederRegulator_new_config_cmd	Command for new VR config	2, 4	L-H-H	None to minimal harm to customer or organization for access to/disclosure of payload data	Incorrect device ID and command code could cause the distribution grid to malfunction in a dangerous/severe manner potentially causing the Utility and the Customer severe financial impact (if not recognized and coupled with multiple other Cap Bank, voltage sensor value anomalies and if in-scale)	Latent and un-reliable connections could cause the operation requested to harm the electric network and incorrect severe operation of the grid (if not recognized and coupled with multiple other Cap Bank, voltage sensor value anomalies and if in-scale)
FeederRegulator_step_down_ack	Acknowledgement step down	2, 4	L-M-H	None to minimal harm to customer or organization for access to/disclosure of payload data	Incorrect device ID and acknowledgement code could cause the distribution grid to malfunction in a dangerous/serious manner potentially causing the Utility and the Customer serious financial impact (if not recognized and coupled with multiple other Cap Bank, voltage sensor value anomalies and if in-scale)	Latent and un-reliable connections could cause the operator of the network to not understand the state of the electric grid and incorrect severe operation of the grid (if not recognized and coupled with multiple other Cap Bank, voltage sensor value anomalies and if in-scale)

Payload Name	Description	CSWG LICs	C-I-A	Confidentiality	Integrity	Availability
FeederRegulator_step_down_cmd	Command to Regulator to step down	2, 4	L-H-H	None to minimal harm to customer or organization for access to/disclosure of payload data	Incorrect device ID and command code could cause the distribution grid to malfunction in a dangerous/severe manner potentially causing the Utility and the Customer severe financial impact (if not recognized and coupled with multiple other Cap Bank, voltage sensor value anomalies and if in-scale)	Latent and un-reliable connections could cause the operation requested to harm the electric network and incorrect severe operation of the grid (if not recognized and coupled with multiple other Cap Bank, voltage sensor value anomalies and if in-scale)
FeederRegulator_step_up_ack	Acknowledgement of step up	2, 4	L-M-H	None to minimal harm to customer or organization for access to/disclosure of payload data	Incorrect device ID and acknowledgement code could cause the distribution grid to malfunction in a dangerous/serious manner potentially causing the Utility and the Customer serious financial impact (if not recognized and coupled with multiple other Cap Bank, voltage sensor value anomalies and if in-scale)	Latent and un-reliable connections could cause the operator of the network to not understand the state of the electric grid and incorrect severe operation of the grid (if not recognized and coupled with multiple other Cap Bank, voltage sensor value anomalies and if in-scale)
FeederRegulator_step_up_cmd	Command to Regulator to step up	2, 4	L-H-H	None to minimal harm to customer or organization for access to/disclosure of payload data	Incorrect device ID and command code could cause the distribution grid to malfunction in a dangerous/severe manner potentially causing the Utility and the Customer severe financial impact (if not recognized and coupled with multiple other Cap Bank, voltage sensor value anomalies and if in-scale)	Latent and un-reliable connections could cause the operation requested to harm the electric network and incorrect severe operation of the grid (if not recognized and coupled with multiple other Cap Bank, voltage sensor value anomalies and if in-scale)
FeederSensor_new_config_ack	Acknowledgement of new configuration	2, 4	L-M-M	None to minimal harm to customer or organization for access to/disclosure of payload data	Incorrect device ID and acknowledgement code could cause the distribution grid to malfunction in a dangerous/serious manner potentially causing the Utility and the Customer serious financial impact (if not recognized and coupled with multiple other Cap Bank, Regulator sensor value anomalies and if in-scale)	Latent and un-reliable connections could cause the operator of the network to not understand the state of the electric grid (if not recognized and coupled with multiple other Cap Bank, Regulator sensor value anomalies and if in-scale)

Payload Name	Description	CSWG LICs	C-I-A	Confidentiality	Integrity	Availability
FeederSensor_new_config_cmd	Command to change configuration	2, 4	L-M-M	None to minimal harm to customer or organization for access to/disclosure of payload data	Incorrect device ID and command code could cause the distribution grid to malfunction in a dangerous/serious manner potentially causing the Utility and the Customer serious financial impact (if not recognized and coupled with multiple other Cap Bank, Regulator sensor value anomalies and if in-scale)	Latent and un-reliable connections could cause the operator of the network to not understand the state of the electric grid and lead to serious missed operations (if not recognized and coupled with multiple other Cap Bank, Regulator sensor value anomalies and if in-scale)
FeederSwitch_close_ack	Acknowledgment of switch close	2, 4	L-H-M	None to minimal harm to customer or organization for access to/disclosure of payload data	Incorrect device ID and acknowledgement status could cause the distribution grid to malfunction in a dangerous/severe manner potentially causing the Utility and the Customer severe financial impact (if not recognized quickly)	Latent and un-reliable connections could cause the operator of the network to not understand the state of the electric grid
FeederSwitch_close_cmd	Command to close feeder switch	2, 4	L-H-H	None to minimal harm to customer or organization for access to/disclosure of payload data	Incorrect device ID and command code could cause the distribution grid to malfunction in a dangerous/severe manner potentially causing the Utility and the Customer severe financial impact (if not recognized quickly)	Latent and un-reliable connections could cause the operation requested to severely harm the electric network (if not recognized quickly)
FeederSwitch_new_config_ack	feeder Switch Controller has received, processed and sends a new configuration acknowledgement	2, 4	L-H-M	None to minimal harm to customer or organization for access to/disclosure of payload data	Incorrect device ID and acknowledgement code could cause the distribution grid to malfunction in a dangerous manner potentially causing serious to severe impact (if coupled with multiple other circuit regulator & voltage sensor value anomalies and if follow-up circuit device stats request not implemented and if in-scale) the Utility and the Customer financial impact	Latent and un-reliable connections could cause serious impact (if coupled with multiple other circuit regulator & voltage sensor value anomalies and if follow-up circuit device stats request not implemented and if in-scale) if the operator of the network does not understand the state of the electric grid

Payload Name	Description	CSWG LICs	C-I-A	Confidentiality	Integrity	Availability
FeederSwitch_new_config_cmd	Command to perform a feeder Switch Controller new configuration	2, 4	L-H-H	None to minimal harm to customer or organization for access to/disclosure of payload data	Incorrect device ID configuration information and configuration command could cause the distribution grid to malfunction in a dangerous manner potentially causing the Utility and the Customer financial impact (if coupled with multiple other circuit regulator & voltage sensor value anomalies and if follow-up circuit device stats request not implemented and if in-scale)	Latent and un-reliable connections could cause the operation requested to severely harm (if coupled with multiple other circuit regulator & voltage sensor value anomalies and if follow-up circuit device stats request not implemented and if in-scale) the electric network
FeederSwitch_open_ack	Confirmation of switch open	2, 4	L-H-M	None to minimal harm to customer or organization for access to/disclosure of payload data	Incorrect device ID and acknowledgement code could cause the distribution grid to malfunction in a dangerous/severe manner potentially causing the Utility and the Customer severe financial impact (if not recognized quickly)	Latent and un-reliable connections could cause the operator of the network to not understand the state of the electric grid and incorrectly operate the grid in a dangerous/serious manner
FeederSwitch_open_cmd	Command to open feeder switch	2, 4	L-H-H	None to minimal harm to customer or organization for access to/disclosure of payload data	Incorrect device ID and command code could cause the distribution grid to malfunction in a dangerous/severe manner potentially causing the Utility and the Customer severe financial impact (if not recognized quickly)	Latent and un-reliable connections could cause the operation requested to severely harm the electric network (if not recognized quickly)

5.4.1.5.1.2 Scenario: Feeder Capacitor Bank switch is Closed

Narrative

In this scenario, the Feeder Cab Bank actor is commanded with the FeederCapBank_close_cmd payload to Close the circuit breakers of the Capacitors onto the distribution circuit. The Feeder Cab Bank shall send acknowledgment of this command with the FeederCapBank_close_ack payload.

NOTE: This scenario is also used for in the Distribution System Demand Response use case and for that use case, the Reliability, Latency, and How Often metrics are different. The differences for Distribution System Demand Response Latency, When, and How Often requirements are highlighted in yellow in the table below. For more information, please see the requirements spreadsheet.

Business Objectives

Payload Name	Payload Type	Payload Attributes	PAP02 Baseload (routine)	PAP02 Highload (full load)	Originating Actor	Destination Actor	Reliability	Latency	When	How Often	Payload Size
FeederCapBank_close_ack	ack	Scenario	X - VVC	X - DSDR	Feeder Cap Bank	DMS	> 99.5%	< 5 sec, < 4 sec	24x7, 1-6 hr duration, 4-8 times a year	1 per | fdrCB per | 12 hours, 1 per | fdrCB per | 5 min	25
FeederCapBank_close_cmd	cmd	device ID, command code	X - VVC	X - DSDR	DMS	Feeder Cap Bank	> 99.5%	< 5 sec, < 4 sec	24x7, 1-6 hr duration, 4-8 times a year	1 per | fdrCB per | 12 hours, 1 per | fdrCB per | 5 min	150

5.4.1.5.1.3 Scenario: Feeder Capacitor Bank switch is Opened

Narrative

In this scenario, the Feeder Cab Bank actor is commanded with the FeederCapBank_open_cmd payload to Open the circuit breakers of the Capacitors from the distribution circuit. The Feeder Cab Bank shall send acknowledgment of this command with the FeederCapBank_open_ack payload.

NOTE: This scenario is also used for in the Distribution System Demand Response use case and for that use case, the Reliability, Latency, and How Often metrics are different. The differences for Distribution System Demand Response Latency, When, and How Often requirements are highlighted in yellow in the table below. For more information, please see the requirements spreadsheet.

Business Objectives

Payload Name	Payload Type	Payload Attributes	PAP02 Baseload (routine)	PAP02 Highload (full load)	Originating Actor	Destination Actor	Reliability	Latency	When	How Often	Payload Size
FeederCapBank_open_ack	ack	device ID, acknowledgement code	X - VVC	X - DSDR	Feeder Cap Bank	DMS	> 99.5%	< 5 sec, < 4 sec	24x7, 1-6 hr duration, 4-8 times a year	1 per | fdrCB per | 12 hours, 1 per | fdrCB per | 5 min	25
FeederCapBank_open_cmd	cmd	device ID, command code	X - VVC	X - DSDR	DMS	Feeder Cap Bank	> 99.5%	< 5 sec, < 4 sec	24x7, 1-6 hr duration, 4-8 times a year	1 per | fdrCB per | 12 hours, 1 per | fdrCB per | 5 min	150

5.4.1.5.1.4 Scenario: Feeder Capacitor Bank Configuration

Narrative

In this scenario, the Feeder Cab Bank actor is configured with the FeederCapBank_new_config_cmd payload. The Feeder Cab Bank shall send acknowledgment of this configuration with the FeederCapBank_new_config_ack payload.

NOTE: This scenario is also used for in the Distribution System Demand Response use case and for that use case, the Reliability, Latency, and How Often metrics are different. The differences for Distribution System Demand Response Latency, When, and How Often requirements are highlighted in yellow in the table below. For more information, please see the requirements spreadsheet.

Business Objectives

Payload Name	Payload Type	Payload Attributes	PAP02 Baseload (routine)	PAP02 Highload (full load)	Originating Actor	Destination Actor	Reliability	Latency	When	How Often	Payload Size
FeederCapBank_new_config_ack	ack	device ID, acknowledgement code	X - VVC	X - DSDR	Feeder Cap Bank	DMS	> 99.5%	< 5 sec	24x7, 1-6 hr duration, 4-8 times a year	1 per | fdrCB per | week, 1 per | fdrCB per | hour	25
FeederCapBank_new_config_cmd	cmd	device ID, configuration command, configuration information	X - VVC	X - DSDR	DMS	Feeder Cap Bank	> 99.5%	< 5 sec	24x7, 1-6 hr duration, 4-8 times a year	1 per | fdrCB per | week, 1 per | fdrCB per | hour	500

5.4.1.5.1.5 Scenario: Feeder Recloser Configuration

Narrative

In this scenario, the Feeder Recloser actor is configured with the FeederRecloser_new_config_cmd payload. The Feeder Recloser shall send acknowledgment of this configuration with the FeederRecloser_new_config_ack payload.

Business Objectives

Payload Name	Payload Type	Payload Attributes	PAP02 Baseload (routine)	PAP02 Highload (full load)	Originating Actor	Destination Actor	Reliability	Latency	When	How Often	Payload Size
FeederRecloser_new_config_ack	ack	device ID, acknowledgement code	X	0	Feeder Recloser	DMS	> 99.5%	< 5 sec	24x7	1 per | fdrCB per | week	25
FeederRecloser_new_config_cmd	cmd	device ID, configuration command	X	0	DMS	Feeder Recloser	> 99.5%	< 5 sec	24x7	1 per | fdrRC per | week	500

5.4.1.5.1.6 Scenario: Feeder Regulator Configuration

Narrative

In this scenario, the Feeder Regulator actor is configured with the FeederRegulator_new_config_cmd payload. The Feeder Regulator shall send acknowledgment of this configuration with the FeederRegulator_new_config_ack payload.

NOTE: This scenario is also used for in the Distribution System Demand Response use case and for that use case, the Reliability, Latency, and How Often metrics are different. The differences for Distribution System Demand Response Latency, When, and How Often requirements are highlighted in yellow in the table below. For more information, please see the requirements spreadsheet.

Business Objectives

Payload Name	Payload Type	Payload Attributes	PAP02 Baseload (routine)	PAP02 Highload (full load)	Originating Actor	Destination Actor	Reliability	Latency	When	How Often	Payload Size
FeederRegulator_new_config_ack	ack	device ID, acknowledgement code	X - VVC	X - DSDR	Feeder Regulator	DMS	> 99.5%	< 5 sec	24x7, 1-6 hr duration, 4-8 times a year	1 per | fdrVR per | 12 hours, 1 per | fdrVR per | hour	25
FeederRegulator_new_config_cmd	cmd	device ID, command code	X - VVC	X - DSDR	DMS	Feeder Regulator	> 99.5%	< 5 sec	24x7, 1-6 hr duration, 4-8 times a year	1 per | fdrVR per | 12 hours, 1 per | fdrVR per | hour	500

5.4.1.5.1.7 Scenario: Feeder Regulator Step Up Command

Narrative

In this scenario, the Feeder Regulator actor is commanded with the FeederRegulator_step_up_cmd payload to step up voltage on the distribution circuit. The Feeder Regulator shall send acknowledgment of this configuration with the FeederRegulator_step_up_ack payload.

NOTE: This scenario is also used for in the Distribution System Demand Response use case and for that use case, the Reliability, Latency, and How Often metrics are different. The differences for Distribution System Demand Response Latency, When, and How Often requirements are highlighted in yellow in the table below. For more information, please see the requirements spreadsheet.

Business Objectives

Payload Name	Payload Type	Payload Attributes	PAP02 Baseload (routine)	PAP02 Highload (full load)	Originating Actor	Destination Actor	Reliability	Latency	When	How Often	Payload Size
FeederRegulator_step_up_ack	Ack	device ID, acknowledgement code	X - VVC	X - DSDR	Feeder Regulator	DMS	> 99.5%	< 5sec, < 4 sec	24x7, 1-6 hr duration, 4-8 times a year	1 per | fdrVR per | 2 hours, 1 per | fdrVR per | 5 min	25
FeederRegulator_step_up_cmd	cmd	device ID, command code	X - VVC	X - DSDR	DMS	Feeder Regulator	> 99.5%	< 5sec, < 4 sec	24x7, 1-6 hr duration, 4-8 times a year	1 per | fdrVR per | 2 hours, 1 per | fdrVR per | 5 min	250

5.4.1.5.1.8 Scenario: Feeder Regulator Step Down Command

Narrative

In this scenario, the Feeder Regulator actor is commanded with the FeederRegulator_step_down_cmd payload to step down voltage on the distribution circuit. The Feeder Regulator shall send acknowledgment of this configuration with the FeederRegulator_step_down_ack payload.

NOTE: This scenario is also used for in the Distribution System Demand Response use case and for that use case, the Reliability, Latency, and How Often metrics are different. The differences for Distribution System Demand Response Latency, When, and How Often requirements are highlighted in yellow in the table below. For more information, please see the requirements spreadsheet.

Business Objectives

Payload Name	Payload Type	Payload Attributes	PAP02 Baseload (routine)	PAP02 Highload (full load)	Originating Actor	Destination Actor	Reliability	Latency	When	How Often	Payload Size
FeederRegulator_step_down_ack	ack	device ID, acknowledgement code	X - VVC	X - DSDR	Feeder Regulator	DMS	> 99.5%	< 5 sec, < 4 sec	24x7, 1-6 hr duration, 4-8 times a year	1 per | fdrVR per | 2 hours, 1 per | fdrVR per | 5 min	25
FeederRegulator_step_down_cmd	cmd	device ID, command code	X - VVC	X - DSDR	DMS	Feeder Regulator	> 99.5%	< 5 sec, < 4 sec	24x7, 1-6 hr duration, 4-8 times a year	1 per | fdrVR per | 2 hours, 1 per | fdrVR per | 5 min	250

5.4.1.5.1.9 Scenario: Feeder Sensor Configuration

Narrative

In this scenario, the Feeder Sensor actor is configured with the FeederSensor_new_config_cmd payload. The Feeder Sensor shall send acknowledgment of this configuration with the FeederSensor_new_config_ack payload.

NOTE: This scenario is also used for in the Distribution System Demand Response use case and for that use case, the Reliability, Latency, and How Often metrics are different. The differences for Distribution System Demand Response Latency, When, and How Often requirements are highlighted in yellow in the table below. For more information, please see the requirements spreadsheet.

Business Objectives

Payload Name	Payload Type	Payload Attributes	PAP02 Baseload (routine)	PAP02 Highload (full load)	Originating Actor	Destination Actor	Reliability	Latency	When	How Often	Payload Size
FeederSensor_new_config_ack	ack	device ID, acknowledgement code	X - VVC	X - DSDR	Feeder Sensor	DMS	> 99.5%	< 5 sec	24x7, 1-6 hr duration, 4-8 times a year	1 per | fdrFS per | week, 1 per | fdrFS per | hour	25
FeederSensor_new_config_cmd	cmd	device ID, command code	X - VVC	X - DSDR	DMS	Feeder Sensor	> 99.5%	< 5 sec	24x7, 1-6 hr duration, 4-8 times a year	1 per | fdrFS per | week, 1 per | fdrFS per | hour	500

5.4.1.5.1.10 Scenario: Feeder Switch is commanded to Close

Narrative

In this scenario, the Feeder Switch actor is commanded with the FeederSwitch_close_cmd payload to Close onto the distribution circuit. The Feeder Switch shall send acknowledgment of this command with the FeederSwitch_close_ack payload.

NOTE: This scenario is also used for in the Distribution System Demand Response use case and for that use case, the Reliability, Latency, and How Often metrics are different. The differences for Distribution System Demand Response Latency, When, and How Often requirements are highlighted in yellow in the table below. For more information, please see the requirements spreadsheet.

Business Objectives

Payload Name	Payload Type	Payload Attributes	PAP02 Baseload (routine)	PAP02 Highload (full load)	Originating Actor	Destination Actor	Reliability	Latency	When	How Often	Payload Size
FeederSwitch_close_ack	ack	device ID, acknowledgement code	X - VVC	X - DSDR	Feeder Switch	DMS	> 99.5%	< 5sec, < 4 sec	24x7, 1-6 hr duration, 4-8 times a year	1 per | fdrSW per | week, 1 per | fdrSW per | 12 hours	25
FeederSwitch_close_cmd	cmd	device ID, command code	X - VVC	X - DSDR	DMS	Feeder Switch	> 99.5%	< 5sec, < 4 sec	24x7, 1-6 hr duration, 4-8 times a year	1 per | fdrSW per | week, 1 per | fdrSW per | 12 hours	150

5.4.1.5.1.11 Scenario: Feeder Switch is commanded to Open

Narrative

In this scenario, the Feeder Switch actor is commanded with the FeederSwitch_open_cmd payload to Close onto the distribution circuit. The Feeder Switch shall send acknowledgment of this command with the FeederSwitch_open_ack payload.

NOTE: This scenario is also used for in the Distribution System Demand Response use case and for that use case, the Reliability, Latency, and How Often metrics are different. The differences for Distribution System Demand Response Latency, When, and How Often requirements are highlighted in yellow in the table below. For more information, please see the requirements spreadsheet.

Business Objectives

Payload Name	Payload Type	Payload Attributes	PAP02 Baseload (routine)	PAP02 Highload (full load)	Originating Actor	Destination Actor	Reliability	Latency	When	How Often	Payload Size
FeederSwitch_open_ack	ack	device ID, acknowledgement code	X – VVC	X - DSDR	Feeder Switch	DMS	> 99.5%	< 5sec, < 4 sec	24x7, 1-6 hr duration, 4-8 times a year	1 per | fdrSW per | week, 1 per | fdrSW per | 12 hours	25
FeederSwitch_open_cmd	cmd	device ID, command code	X – VVC	X - DSDR	DMS	Feeder Switch	> 99.5%	< 5sec, < 4 sec	24x7, 1-6 hr duration, 4-8 times a year	1 per | fdrSW per | week, 1 per | fdrSW per | 12 hours	150

5.4.1.5.1.12 Scenario: Feeder Switch Configuration

Narrative

In this scenario, the Feeder Switch actor is configured with the FeederSwitch_new_config_cmd payload. The Feeder Switch shall send acknowledgment of this configuration with the FeederSwitch_new_config_ack payload.

NOTE: This scenario is also used for in the Distribution System Demand Response use case and for that use case, the Reliability, Latency, and How Often metrics are different. The differences for Distribution System Demand Response Latency, When, and How Often requirements are highlighted in yellow in the table below. For more information, please see the requirements spreadsheet.

Business Objectives

Payload Name	Payload Type	Payload Attributes	PAP02 Baseload (routine)	PAP02 Highload (full load)	Originating Actor	Destination Actor	Reliability	Latency	When	How Often	Payload Size
FeederSwitch_new_config_ack	ack	device ID, acknowledgement code	X – VVC	X - DSDR	Feeder Switch	DMS	> 99.5%	< 5 sec	24x7, 1-6 hr duration, 4-8 times a year	1 per | fdrSW per | week, 1 per | fdrSW per | 12 hours	25
FeederSwitch_new_config_cmd	cmd	device ID, configuration command, configuration information	X – VVC	X - DSDR	DMS	Feeder Switch	> 99.5%	< 5 sec	24x7, 1-6 hr duration, 4-8 times a year	1 per | fdrSW per | week, 1 per | fdrSW per | 12 hours	500

5.4.1.6 Distribution System Demand Response (DSDR)

5.4.1.6.1 Overview

Distribution System Demand Response is an operational mode that reduces the voltage on the Distribution Grid to help manage system load during periods of peak demand. The parallel goal is to avoid violating any low voltage limits on the grid. This mode does not have any new payloads or scenarios. However, how often and the latency requirements differ from normal Voltage and Var Control and Distribution System Monitoring Use Cases.

This use case encompasses four types of distribution feeder devices that operate within the parameters of demand response. These devices include:

- Capacitor Banks
- Line Sensors
- Automated Feeder Switches
- Voltage Regulators

5.4.1.6.2 Applicable Payloads

Payload Name	Description	CSWG LICs	C-I-A	Confidentiality	Integrity	Availability
FeederCapBank_close_ack	feeder Capacitor Bank has performed and sends a close operation acknowledgement	2, 4	L-H-M	None to minimal harm to customer or organization for access to/disclosure of payload data	Incorrect device ID and acknowledgement code could cause the distribution grid to malfunction in a seriously (if coupled with multiple other circuit regulator & voltage sensor value anomalies and follow-up device status request not implemented and if in-scale) dangerous manner potentially causing the Utility and the Customer financial impact	Latent and un-reliable connections could cause the operator of the network to not understand the state of the electric grid and seriously harm the electric network (if coupled with multiple other circuit regulator & voltage sensor value anomalies and if in-scale)
FeederCapBank_close_cmd	Command to close feeder Capacitor Bank	2, 4	L-H-M	None to minimal harm to customer or organization for access to/disclosure of payload data	Incorrect device ID and command code could cause the distribution grid to malfunction in a severe (if coupled with multiple other circuit regulator & voltage sensor value anomalies and if in-scale) and dangerous manner potentially causing the Utility and the Customer financial impact	Latent and un-reliable connections could cause the operator of the network to not be able to operate Feeder Capacitor bank controllers in a timely manner Prior to adding this functionality, crews were dispatched to operate these commands
FeederCapBank_new_config_ack	feeder Capacitor Bank has received, processed and sends a new configuration acknowledgement	2, 4	L-H-M	None to minimal harm to customer or organization for access to/disclosure of payload data	Incorrect device ID and acknowledgement code could cause the distribution grid to malfunction in a dangerous manner potentially causing serious to severe impact (if coupled with multiple other circuit regulator & voltage sensor value anomalies and if follow-up circuit device stats request not implemented and if in-scale) the Utility and the Customer financial impact	Latent and un-reliable connections could cause serious impact (if coupled with multiple other circuit regulator & voltage sensor value anomalies and if follow-up circuit device stats request not implemented and if in-scale) if the operator of the network does not understand the state of the electric grid

Payload Name	Description	CSWG LICs	C-I-A	Confidentiality	Integrity	Availability
FeederCapBank_new_config_cmd	Command to perform a feeder Capacitor Bank new configuration	2, 4	L-H-H	None to minimal harm to customer or organization for access to/disclosure of payload data	Incorrect device ID configuration information and configuration command could cause the distribution grid to malfunction in a dangerous manner potentially causing the Utility and the Customer financial impact (if coupled with multiple other circuit regulator & voltage sensor value anomalies and if follow-up circuit device stats request not implemented and if in-scale)	Latent and un-reliable connections could cause the operation requested to severely harm (if coupled with multiple other circuit regulator & voltage sensor value anomalies and if follow-up circuit device stats request not implemented and if in-scale) the electric network
FeederCapBank_open_ack	feeder Capacitor Bank has performed and sends an open operation acknowledgement	2, 4	L-H-H	None to minimal harm to customer or organization for access to/disclosure of payload data	Incorrect device ID and acknowledgement code could cause the distribution grid to malfunction in a dangerous manner potentially causing the Utility and the Customer financial impact (if coupled with multiple other circuit regulator & voltage sensor value anomalies and if follow-up circuit device stats request not implemented and if in-scale)	Latent and un-reliable connections could cause the operator of the network to not understand the state of the electric grid causing serious up to severe impact (if coupled with multiple other circuit regulator & voltage sensor value anomalies and if follow-up circuit device stats request not implemented and if in-scale)
FeederCapBank_open_cmd	Command to open feeder Capacitor Bank	2, 4	L-H-H	None to minimal harm to customer or organization for access to/disclosure of payload data	Incorrect device ID and command code could cause the distribution grid to malfunction in a dangerous manner potentially causing the Utility and the Customer financial impact (if coupled with multiple other circuit regulator & voltage sensor value anomalies and if follow-up circuit device stats request not implemented and if in-scale)	Latent and un-reliable connections could cause the operation requested to harm the electric network causing serious up to severe impact (if coupled with multiple other circuit regulator & voltage sensor value anomalies and if follow-up circuit device stats request not implemented and if in-scale)

Payload Name	Description	CSWG LICs	C-I-A	Confidentiality	Integrity	Availability
FeederCapBank_sensor_data_cmd	Query for sensor data	2, 4	L-H-M	None to minimal harm to customer or organization for access to/disclosure of payload data	Incorrect device ID and command code could cause the distribution grid to malfunction in a dangerous manner potentially causing the Utility and the Customer financial impact, (if coupled with multiple other circuit regulator & voltage sensor value anomalies and if follow-up circuit device stats request not implemented and if in-scale)	Latent and un-reliable connections could cause the operator of the network to not understand the state of the electric grid
FeederCapBank_sensor_data_resp-data	sensor data response from feeder Capacitor Bank Controller	2, 4	L-H-M	None to minimal harm to customer or organization for access to/disclosure of payload data	Incorrect device ID and response data could cause the distribution grid to malfunction in a dangerous manner potentially causing the Utility and the Customer financial impact, (if coupled with multiple other circuit regulator & voltage sensor value anomalies and if follow-up circuit device stats request not implemented and if in-scale)	Latent and un-reliable connections could cause the operator of the network to not understand the state of the electric grid
FeederRegulator_new_config_ack	Acknowledgement of new configuration	2, 4	L-H-M	None to minimal harm to customer or organization for access to/disclosure of payload data	Incorrect device ID and acknowledgement code could cause the distribution grid to malfunction in a dangerous/severe manner potentially causing the Utility and the Customer severe financial impact (if not recognized and coupled with multiple other Cap Bank, voltage sensor value anomalies and if in-scale)	Latent and un-reliable connections could cause the operator of the network to not understand the state of the electric grid and incorrect serious operation of the grid (if not recognized and coupled with multiple other Cap Bank, voltage sensor value anomalies and if in-scale)
FeederRegulator_new_config_cmd	Command for new VR config	2, 4	L-H-H	None to minimal harm to customer or organization for access to/disclosure of payload data	Incorrect device ID and command code could cause the distribution grid to malfunction in a dangerous/severe manner potentially causing the Utility and the Customer severe financial impact (if not recognized and coupled with multiple other Cap Bank, voltage sensor value anomalies and if in-scale)	Latent and un-reliable connections could cause the operation requested to harm the electric network and incorrect severe operation of the grid (if not recognized and coupled with multiple other Cap Bank, voltage sensor value anomalies and if in-scale)

Payload Name	Description	CSWG LICs	C-I-A	Confidentiality	Integrity	Availability
FeederRegulator_sensor_data_cmd	Command to query sensor data	2, 4	L-L-M	None to minimal harm to customer or organization for access to/disclosure of payload data	Incorrect device ID and command code could cause the distribution grid to malfunction in a dangerous manner potentially causing the Utility and the Customer financial impact	Latent and un-reliable connections could cause the operator of the network to not understand the state of the electric grid and serious incorrect operation of the grid (if not recognized and coupled with multiple other Cap Bank, voltage sensor value anomalies and if in-scale)
FeederRegulator_sensor_data_resp-data	response from sensor	2, 4	L-L-M	None to minimal harm to customer or organization for access to/disclosure of payload data	Incorrect device ID and response data could cause the distribution grid to malfunction in a dangerous but minimal manner potentially causing the Utility and the Customer financial impact	Latent and un-reliable connections could cause the operator of the network to not understand the state of the electric grid and serious incorrect operation of the grid (if not recognized and coupled with multiple other Cap Bank, voltage sensor value anomalies and if in-scale)
FeederRegulator_step_down_ack	Acknowledgement step down	2, 4	L-M-H	None to minimal harm to customer or organization for access to/disclosure of payload data	Incorrect device ID and acknowledgement code could cause the distribution grid to malfunction in a dangerous/serious manner potentially causing the Utility and the Customer serious financial impact (if not recognized and coupled with multiple other Cap Bank, voltage sensor value anomalies and if in-scale)	Latent and un-reliable connections could cause the operator of the network to not understand the state of the electric grid and incorrect severe operation of the grid (if not recognized and coupled with multiple other Cap Bank, voltage sensor value anomalies and if in-scale)
FeederRegulator_step_down_cmd	Command to Regulator to step down	2, 4	L-H-H	None to minimal harm to customer or organization for access to/disclosure of payload data	Incorrect device ID and command code could cause the distribution grid to malfunction in a dangerous/severe manner potentially causing the Utility and the Customer severe financial impact (if not recognized and coupled with multiple other Cap Bank, voltage sensor value anomalies and if in-scale)	Latent and un-reliable connections could cause the operation requested to harm the electric network and incorrect severe operation of the grid (if not recognized and coupled with multiple other Cap Bank, voltage sensor value anomalies and if in-scale)

Payload Name	Description	CSWG LICs	C-I-A	Confidentiality	Integrity	Availability
FeederRegulator_step_up_ack	Acknowledgement of step up	2, 4	L-M-H	None to minimal harm to customer or organization for access to/disclosure of payload data	Incorrect device ID and acknowledgement code could cause the distribution grid to malfunction in a dangerous/serious manner potentially causing the Utility and the Customer serious financial impact (if not recognized and coupled with multiple other Cap Bank, voltage sensor value anomalies and if in-scale)	Latent and un-reliable connections could cause the operator of the network to not understand the state of the electric grid and incorrect severe operation of the grid (if not recognized and coupled with multiple other Cap Bank, voltage sensor value anomalies and if in-scale)
FeederRegulator_step_up_cmd	Command to Regulator to step up	2, 4	L-H-H	None to minimal harm to customer or organization for access to/disclosure of payload data	Incorrect device ID and command code could cause the distribution grid to malfunction in a dangerous/severe manner potentially causing the Utility and the Customer severe financial impact (if not recognized and coupled with multiple other Cap Bank, voltage sensor value anomalies and if in-scale)	Latent and un-reliable connections could cause the operation requested to harm the electric network and incorrect severe operation of the grid (if not recognized and coupled with multiple other Cap Bank, voltage sensor value anomalies and if in-scale)
FeederSensor_new_config_ack	Acknowledgement of new configuration	2, 4	L-M-M	None to minimal harm to customer or organization for access to/disclosure of payload data	Incorrect device ID and acknowledgement code could cause the distribution grid to malfunction in a dangerous/serious manner potentially causing the Utility and the Customer serious financial impact (if not recognized and coupled with multiple other Cap Bank, Regulator sensor value anomalies and if in-scale)	Latent and un-reliable connections could cause the operator of the network to not understand the state of the electric grid (if not recognized and coupled with multiple other Cap Bank, Regulator sensor value anomalies and if in-scale)
FeederSensor_new_config_cmd	Command to change configuration	2, 4	L-M-M	None to minimal harm to customer or organization for access to/disclosure of payload data	Incorrect device ID and command code could cause the distribution grid to malfunction in a dangerous/serious manner potentially causing the Utility and the Customer serious financial impact (if not recognized and coupled with multiple other Cap Bank, Regulator sensor value anomalies and if in-scale)	Latent and un-reliable connections could cause the operator of the network to not understand the state of the electric grid and lead to serious missed operations (if not recognized and coupled with multiple other Cap Bank, Regulator sensor value anomalies and if in-scale)

Payload Name	Description	CSWG LICs	C-I-A	Confidentiality	Integrity	Availability
FeederSensor_sensor_data_cmd	Command to query sensor data	2, 4	L-M-M	None to minimal harm to customer or organization for access to/disclosure of payload data	Incorrect device ID and command code could cause the distribution grid to malfunction in a dangerous manner potentially causing the Utility and the Customer serious financial impact (if not recognized and coupled with multiple other Cap Bank, Regulator sensor value anomalies and if in-scale)	Latent and un-reliable connections could cause the operator of the network to not understand the state of the electric grid and lead to serious missed operations (if not recognized and coupled with multiple other Cap Bank, Regulator sensor value anomalies and if in-scale)
FeederSensor_sensor_data_resp-data	Response to Sensor query	2, 4	L-M-M	None to minimal harm to customer or organization for access to/disclosure of payload data	Incorrect device ID and response data could cause the distribution grid to malfunction in a dangerous manner potentially causing the Utility and the Customer serious financial impact (if not recognized and coupled with multiple other Cap Bank, Regulator sensor value anomalies and if in-scale)	Latent and un-reliable connections could cause the operator of the network to not understand the state of the electric grid and lead to serious incorrect operation of the grid (if not recognized and coupled with multiple other Cap Bank, Regulator sensor value anomalies and if in-scale)
FeederSwitch_close_ack	Acknowledgment of switch close	2, 4	L-H-M	None to minimal harm to customer or organization for access to/disclosure of payload data	Incorrect device ID and acknowledgement status could cause the distribution grid to malfunction in a dangerous/severe manner potentially causing the Utility and the Customer severe financial impact (if not recognized quickly)	Latent and un-reliable connections could cause the operator of the network to not understand the state of the electric grid
FeederSwitch_close_cmd	Command to close feeder switch	2, 4	L-H-H	None to minimal harm to customer or organization for access to/disclosure of payload data	Incorrect device ID and command code could cause the distribution grid to malfunction in a dangerous/severe manner potentially causing the Utility and the Customer severe financial impact (if not recognized quickly)	Latent and un-reliable connections could cause the operation requested to severely harm the electric network (if not recognized quickly)

Payload Name	Description	CSWG LICs	C-I-A	Confidentiality	Integrity	Availability
FeederSwitch_new_config_ack	feeder Switch Controller has received, processed and sends a new configuration acknowledgement	2, 4	L-H-M	None to minimal harm to customer or organization for access to/disclosure of payload data	Incorrect device ID and acknowledgement code could cause the distribution grid to malfunction in a dangerous manner potentially causing serious to severe impact (if coupled with multiple other circuit regulator & voltage sensor value anomalies and if follow-up circuit device stats request not implemented and if in-scale) the Utility and the Customer financial impact	Latent and un-reliable connections could cause serious impact (if coupled with multiple other circuit regulator & voltage sensor value anomalies and if follow-up circuit device stats request not implemented and if in-scale) if the operator of the network does not understand the state of the electric grid
FeederSwitch_new_config_cmd	Command to perform a feeder Switch Controller new configuration	2, 4	L-H-H	None to minimal harm to customer or organization for access to/disclosure of payload data	Incorrect device ID configuration information and configuration command could cause the distribution grid to malfunction in a dangerous manner potentially causing the Utility and the Customer financial impact (if coupled with multiple other circuit regulator & voltage sensor value anomalies and if follow-up circuit device stats request not implemented and if in-scale)	Latent and un-reliable connections could cause the operation requested to severely harm (if coupled with multiple other circuit regulator & voltage sensor value anomalies and if follow-up circuit device stats request not implemented and if in-scale) the electric network
FeederSwitch_open_ack	Confirmation of switch open	2, 4	L-H-M	None to minimal harm to customer or organization for access to/disclosure of payload data	Incorrect device ID and acknowledgement code could cause the distribution grid to malfunction in a dangerous/severe manner potentially causing the Utility and the Customer severe financial impact (if not recognized quickly)	Latent and un-reliable connections could cause the operator of the network to not understand the state of the electric grid and incorrectly operate the grid in a dangerous/serious manner
FeederSwitch_open_cmd	Command to open feeder switch	2, 4	L-H-H	None to minimal harm to customer or organization for access to/disclosure of payload data	Incorrect device ID and command code could cause the distribution grid to malfunction in a dangerous/severe manner potentially causing the Utility and the Customer severe financial impact (if not recognized quickly)	Latent and un-reliable connections could cause the operation requested to severely harm the electric network (if not recognized quickly)

Payload Name	Description	CSWG LICs	C-I-A	Confidentiality	Integrity	Availability
FeederSwitch_sensor_data_cmd	Query to switch for data	2, 4	L-H-M	None to minimal harm to customer or organization for access to/disclosure of payload data	Incorrect device ID and command code could cause the distribution grid to malfunction in a severe dangerous manner potentially causing the Utility and the Customer severe financial impact	Latent and un-reliable connections could cause the operator of the network to not understand the state of the electric grid and may lead to serious incorrect electric grid operations
FeederSwitch_sensor_data_resp-data	Response for switch sensor	2, 4	L-H-M	None to minimal harm to customer or organization for access to/disclosure of payload data	Incorrect device ID and response data could cause the distribution grid to malfunction in a dangerous/severe manner potentially causing the Utility and the Customer severe financial impact	Latent and un-reliable connections could cause the operator of the network to not understand the state of the electric grid and may lead to serious incorrect electric grid operations

5.4.1.6.3 Scenarios

The following scenarios are used for Distribution System Demand Response and are documented in other sections in this document. For reference, the scenario names and links are listed below:

- Feeder Line Device Sensor Data Acquisition
- Feeder Capacitor Bank is Closed into load
- Feeder Capacitor Bank Configuration
- Feeder Capacitor Bank is Opened out of load
- Feeder Regulator Configuration
- Feeder Regulator Step Down Command
- Feeder Regulator Step Up Command
- Feeder Sensor Configuration
- Feeder Switch is commanded to Close
- Feeder Switch Configuration
- Feeder Switch is commanded to Open

5.4.1.7 Line Fault Detection, Clearing, Isolation and Reconfiguration

5.4.1.7.1 Overview

Line segmentation is the concept of dynamically reconfiguring loop feeders to restore the maximum number of customers after a fault has caused a section of the grid (i.e. a feeder segment) to be out of service. The illustration below shows the steps for how a fault, clearing, isolation and reconfiguration operations occur. NOTE: NC = Normally Closed and NO = Normally Open in the following diagram.

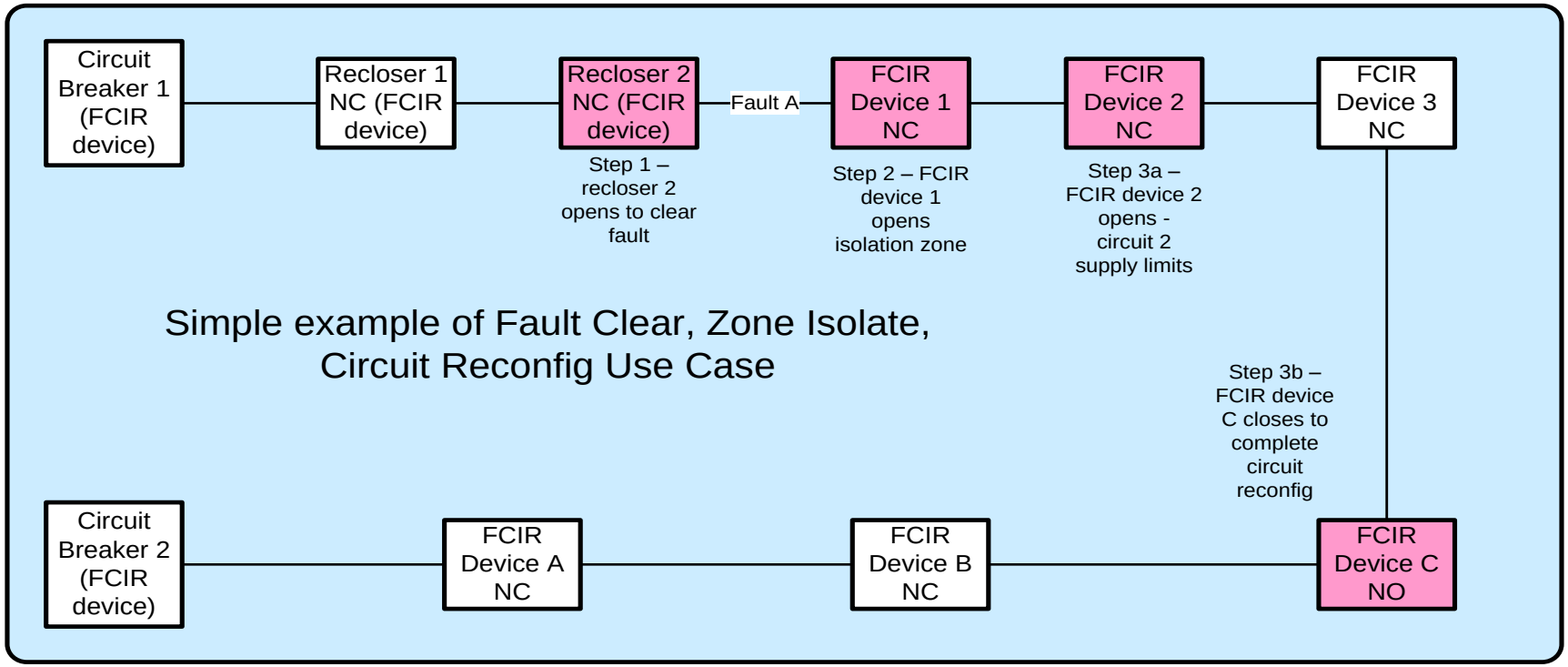

The SG-Network task force has documented three different control scenarios. These scenarios include Centralized DAC, Regional DAC and Substation DAC.

5.4.1.7.2 Applicable Payloads

Payload Name	Description	CSWG LICs	C-I-A	Confidentiality	Integrity	Availability
circuit_device_oper_cmd	DMS or DAC sends an operate request to specific zone isolation or circuit restoring devices	2, 4	L-H-H	None to minimal harm to customer or organization for access to/disclosure of payload data	Incorrect device ID and command code could cause the distribution grid to malfunction in a dangerous manner (operating the wrong device and not completing the necessary zone isolation task) potentially causing the Utility significant financial impact or unsafe conditions to customers on impacted portions of the faulted circuit(s)	Latent and un-reliable connections could cause the distribution grid to malfunction in a dangerous manner (operating the wrong device and not completing the necessary zone isolation task) potentially causing the Utility significant financial impact or unsafe conditions to customers on impacted portions of the faulted circuit(s)
circuit_device_oper_cmd _ack	specific zone isolation or circuit restoring device sends command receipt/operation acknowledgement to DMS or DAC	2, 4	L-H-M	None to minimal harm to customer or organization for access to/disclosure of payload data	Incorrect device ID and acknowledgement code could cause the inappropriate workflow next step execution, distribution grid to malfunction in a dangerous manner (operating the wrong device and not completing the necessary zone isolation task) potentially causing the Utility significant financial impact (if follow-up device status not implemented) or unsafe conditions to customers on impacted portions of the faulted circuit(s)	Latent and un-reliable connections could cause the distribution grid to malfunction in a dangerous manner (operating the wrong device and not completing the necessary zone isolation task) potentially causing the Utility financial impact or unsafe conditions to customers on impacted portions of the faulted circuit
circuit_device_self-init_status_resp-data	specific zone isolation or circuit restoring device sends self initiated device status to DMS or DAC	2, 4	L-H-M	None to minimal harm to customer or organization for access to/disclosure of payload data	Incorrect device ID and response data could cause incorrect workflow next task execution that may lead to the distribution grid malfunction in a dangerous manner potentially causing significant impact (if follow-up or routine device status requests not implemented) to the Utility and the Customer financials	Latent and un-reliable connections could cause the operator of the network to not understand the state of the electric grid

Payload Name	Description	CSWG LICs	C-I-A	Confidentiality	Integrity	Availability
circuit_device_status_cmd	DMS or DAC sends device status request to specific zone isolation or circuit restoring devices	2, 4	L-H-H	None to minimal harm to customer or organization for access to/disclosure of payload data	Incorrect device ID and command code could cause either the correct device to attempt to perform an inappropriate action or the wrong device to perform an action all of which may lead to unsafe or malfunction operation of the distribution grid that may have severe to catastrophic harm (especially if in-scale) to Utility and/or Customer	Latent and un-reliable connections may lead insufficient data for application to determine zone-isolation/circuit-reconfig actions (especially if in-scale), which might lead to significantly more customers being without power than necessary
circuit_device_status_resp-data	specific zone isolation or circuit restoring devices send device status to DMS or DAC	2, 4	L-H-M	None to minimal harm to customer or organization for access to/disclosure of payload data	Incorrect device ID and response data could cause the distribution grid to malfunction in a dangerous manner potentially causing significant impact (especially if follow-up device status checks not implemented or if in-scale) to the Utility and the Customer financials	Latent and un-reliable connections may lead insufficient data for application to determine zone-isolation/circuit-reconfig actions, which might lead to more customers being without power than necessary
fault_lock_out_alarm	fault clearing device sends lock-out alarm to Operations actors	2, 4	L-H-H	None to minimal harm to customer or organization for access to/disclosure of payload data	Incorrect device ID and alarm code may cause Utility not recognizing the correct operational state of the distribution grid and if failing to perform a follow-up device state request, may lead to incorrect workflow next task execution, which may lead to severe harm to safe reliable economic (if other circuit device status requests are not implemented and if in-scale) grid operations and harm to Customer	Latent and un-reliable connections could cause the operator of the electrical grid to perform unnecessary health checks of the devices and the telecomm network, and lead to lose of trust in distribution applications to function properly, leading to severe harm (if other circuit device status requests are not implemented and if in-scale) to organization and customer

5.4.1.7.3 Scenarios

5.4.1.7.3.1 Scenario: DMS or DAC sends an operate request Feeder Line Devices

Narrative

In this scenario, the DMS or DAC actor sends the circuit_device_oper_cmd payload to a Feeder line device with line segmentation capability. The Feeder line device shall send acknowledgment of this configuration with the circuit_device_oper_cmd_ack payload.

Business Objectives

Payload Name	Payload Type	Payload Attributes	PAP02 Baseload (routine)	PAP02 Highload (full load)	Originating Actor	Destination Actor	Reliability	Latency	When	How Often	Payload Size
circuit_device_oper_cmd	cmd	device ID, command code	X	X	DMS,DAC - sub,DAC - Ops/Regnl	Feeder Recloser, Feeder Switch,Feeder Recloser, Feeder Switch, Feeder sectionalizer	> 99%,> 99.5%	< 5 sec	within < 1.5 min of fault event, within < 3 min of fault event	1 per | Sub(x)-Zone(y)-isolate-device per | x zone isolation step event,1 per | Sub(x) per | x circuit reconfig step event,1 per | Sub(x)DAC-Zone(y)-isolate-device per | x zone isolation step event,1 per | Sub(x)DAC per | x circuit reconfig step event	25

Payload Name	Payload Type	Payload Attributes	PAP02 Baseload (routine)	PAP02 Highload (full load)	Originating Actor	Destination Actor	Reliability	Latency	When	How Often	Payload Size
circuit_device_oper_cmd_ack	ack	device ID, acknowledgement code	X	X	Feeder Recloser, Feeder Switch,Feeder Recloser, Feeder Switch, Feeder sectionalizer	DMS,DAC - sub,DAC - Ops/Regnl	> 99%,> 99.5%	< 5 sec	within < 1.5 min of fault event, within < 3 min of fault event	1 per | Sub(x)-Zone(y)-isolate-device per | x zone isolation step event,1 per | Sub(x) per | x circuit reconfig step event,1 per | Sub(x)DAC-Zone(y)-isolate-device per | x zone isolation step event,1 per | Sub(x)DAC per | x circuit reconfig step event	25

5.4.1.7.3.2 Scenario: DMS or DAC Requests Feeder Line Device Status

Narrative

In this scenario, the DMS or DAC actor sends the circuit_device_status_cmd payload to a Feeder line device with line segmentation capability in order to request the distribution networks operational state. The Feeder line device shall a response to this request with the circuit_device_status_resp-data payload.

Business Objectives

Payload Name	Payload Type	Payload Attributes	PAP02 Baseload (routine)	PAP02 Highload (full load)	Originating Actor	Destination Actor	Reliability	Latency	When	How Often	Payload Size
circuit_device_status_cmd	cmd	device ID, command code	X	X	DMS,DAC - sub,DAC - Ops/Regnl	Feeder Circuit Breaker, Feeder Recloser, Feeder Switch, Feeder sectionalizer	> 99%,> 99.5%	< 5 sec	within < 30sec of fault event, within < 2 min of fault event	1 per | Sub(x)-Zone(y)-isolate-device per | x zone isolation step event,1 per | Sub(x)-Circuit(y)-reconfig-device per | x circuit reconfig step event,1 per | Sub(x)DAC-Zone(y)-isolate-device per | x zone isolation step event,1 per | Sub(x)DAC-Circuit(y)-reconfig-device per | x circuit reconfig step event	25

Payload Name	Payload Type	Payload Attributes	PAP02 Baseload (routine)	PAP02 Highload (full load)	Originating Actor	Destination Actor	Reliability	Latency	When	How Often	Payload Size
circuit_device_status_resp-data	resp-data	device ID, response data	X	X	Feeder Circuit Breaker, Feeder Recloser, Feeder Switch, Feeder sectionalizer	DMS,DAC - sub,DAC - Ops/Regnl	> 99%,> 99.5%	< 5 sec	within < 1 min of fault event, within < 2.5 min of fault event	1 per | Sub(x)-Zone(y)-isolate-device per | x zone isolation step event,1 per | Sub(x)-Circuit(y)-reconfig-device per | x circuit reconfig step event,1 per | Sub(x)DAC-Zone(y)-isolate-device per | x zone isolation step event,1 per | Sub(x)DAC-Circuit(y)-reconfig-device per | x circuit reconfig step event	50

5.4.1.7.3.3 Scenario: Feeder Line Device reports Distribution Network Status

Narrative

In this scenario, the Feeder Line Device sends a self-initiated status report to the DMS or DAC actor with the circuit_device_self-init_status_resp-data payload.

Business Objectives

Payload Name	Payload Type	Payload Attributes	PAP02 Baseload (routine)	PAP02 Highload (full load)	Originating Actor	Destination Actor	Reliability	Latency	When	How Often	Payload Size
circuit_device_self-init_status_resp-data	resp-data	device ID, response data	X	X	Feeder Recloser, Feeder Switch,Feeder Recloser, Feeder Switch, Feeder sectionalizer	DMS,DAC - sub,DAC - Ops/Regnl	> 99%,> 99.5%	< 5 sec	within < 2 min of fault event, within < 5 min of fault event (to avoid sustained outage class.)	1 per | Sub(x)-Zone(y)-isolate-device per | x zone isolation step event,1 per | Sub(x) per | x circuit reconfig step event,1 per | Sub(x)DAC-Zone(y)-isolate-device per | x zone isolation step event,1 per | Sub(x)DAC per | x circuit reconfig step event	50

5.4.1.7.3.4 Scenario: Feeder Line Device sends fault alert

Narrative

In this scenario, the Feeder Line Device sends the fault_lock_out_alarm to the Distr. SCADA FEP,DMS, OMS, Analytic DB,DAC - Ops/Regnl, DMS, OMS, or Analytic DB when an electrical fault occurs on the electric distribution network.

Business Objectives

Payload Name	Payload Type	Payload Attributes	PAP02 Baseload (routine)	PAP02 Highload (full load)	Originating Actor	Destination Actor	Reliability	Latency	When	How Often	Payload Size
fault_lock_out_alarm	alarm	device ID, alarm code	X	X	Feeder Recloser, Feeder Circuit Breaker,Distr. SCADA FEP	Distr. SCADA FEP,DMS, OMS, Analytic DB,DAC - Ops/Regnl, DMS, OMS, Analytic DB	> 99%,> 99.5%	< 5 sec,< 4 sec	within < 10sec of fault event, within < 15sec of fault event	x per | Sub(x)-faulted-Circuit(y)-lockout-device per | time period,x per | Sub(x)DAC-faulted-Circuit(y)-lockout-device per | time period	50

5.5 Distribution Customer Storage

5.5.1 Overview

The Distributed Customer Storage use cases focus on the function and role of the electric grid storage devices that are those deployed along distribution feeder circuits/laterals for the purposes of: peak load shaving, voltage support, power quality, demand control, interruption protection on a specific Distribution feeder circuit and/or specific clusters of customers served by that feeder circuit versus the larger capacity Distributed Storage devices co-located with distribution substations which is a different use case. There are three main scenarios described in this section:

- Dispatch Distributed Customer Storage
- Islanded Distribution Customer Storage
- Capped Customer Energy Usage

For each scenario, the currently documented payload business application requirements are described. Prior to the scenario descriptions, the Reference Architecture and Possible Communication Paths diagrams and Actors list are provided from which each of the scenarios are subsets.

5.5.1.1 Reference Architecture with Domains, Actors and Interfaces

Smart Grid Conceptual Actors / Data Flow Diagram – Cross Domain Network Focused – OpenSG / SG-Network TF

Distr Storage - Use Cases

DRAFT 14Feb2012
Base – file SG-NET-diagram-r5.1.vsd
page size: ANSI-D

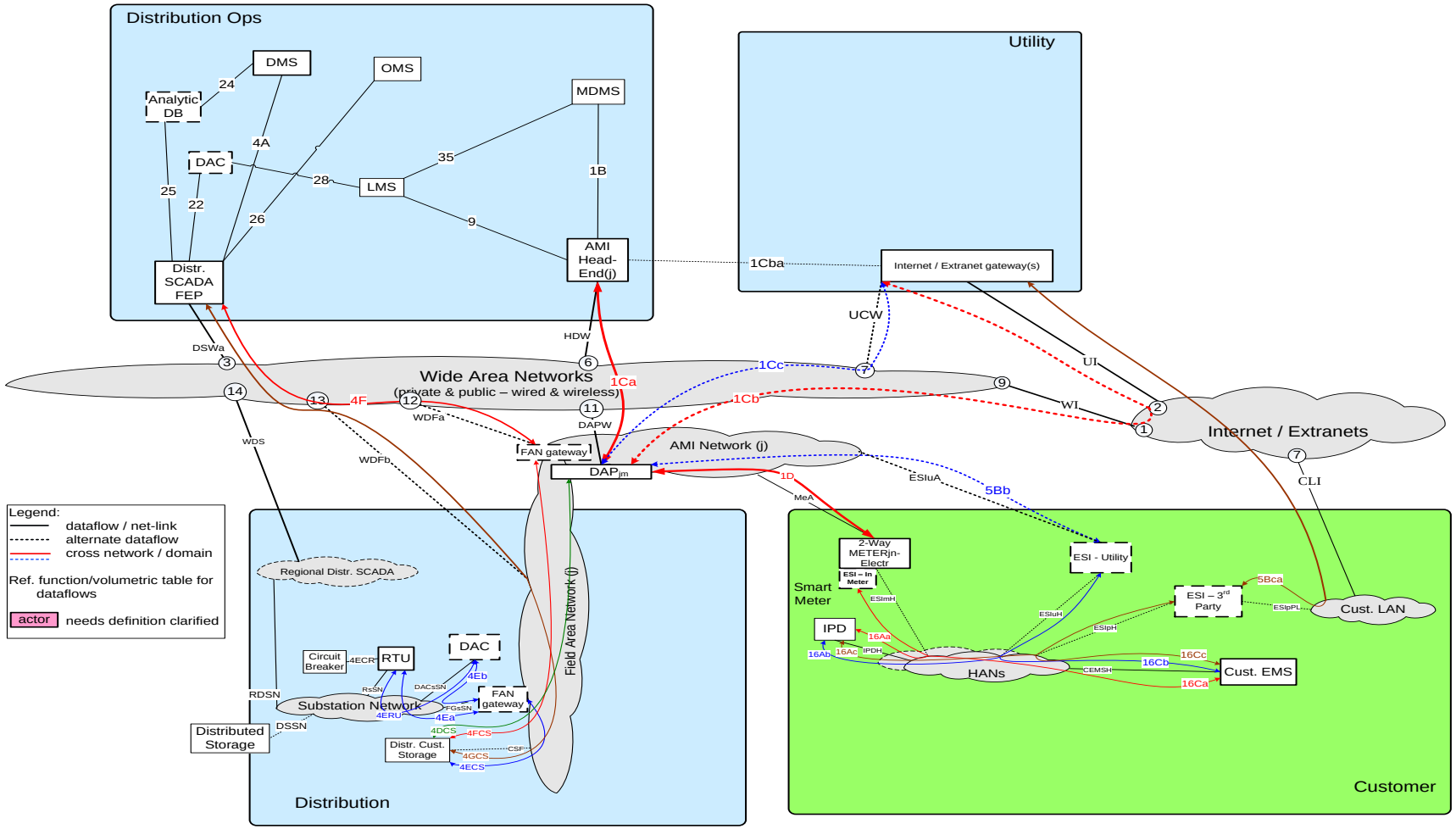

5.5.1.2 Possible communication paths

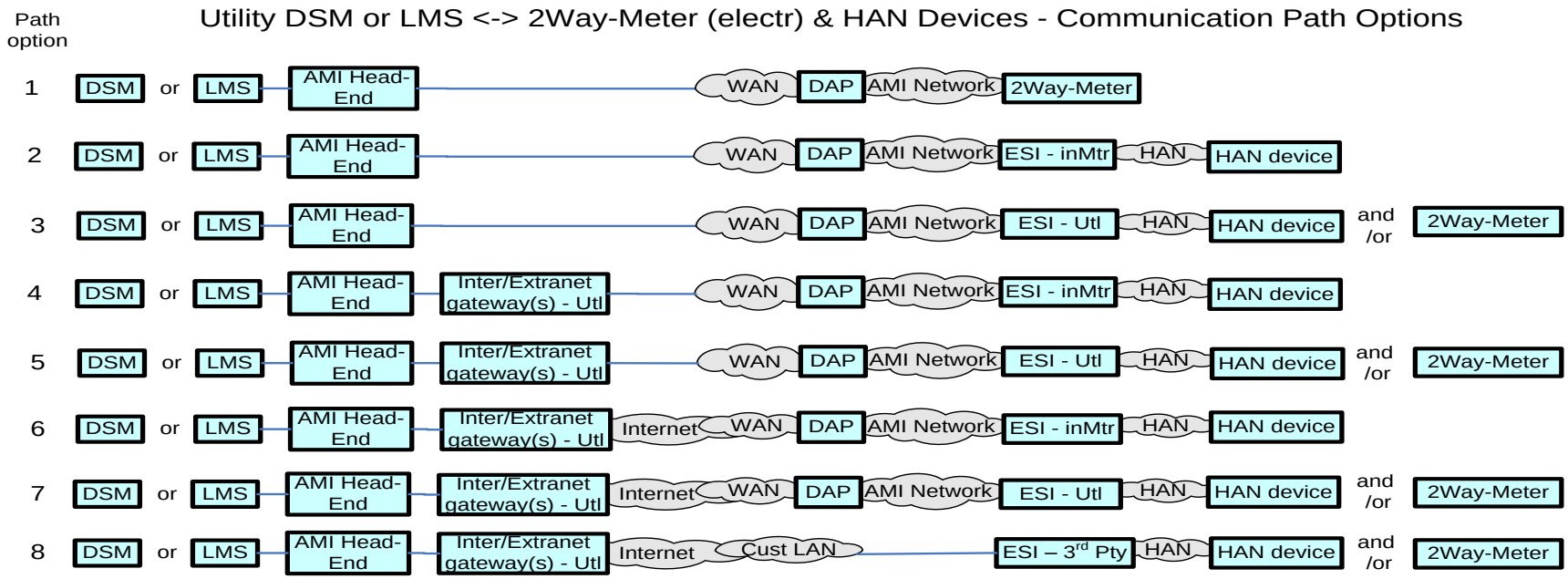

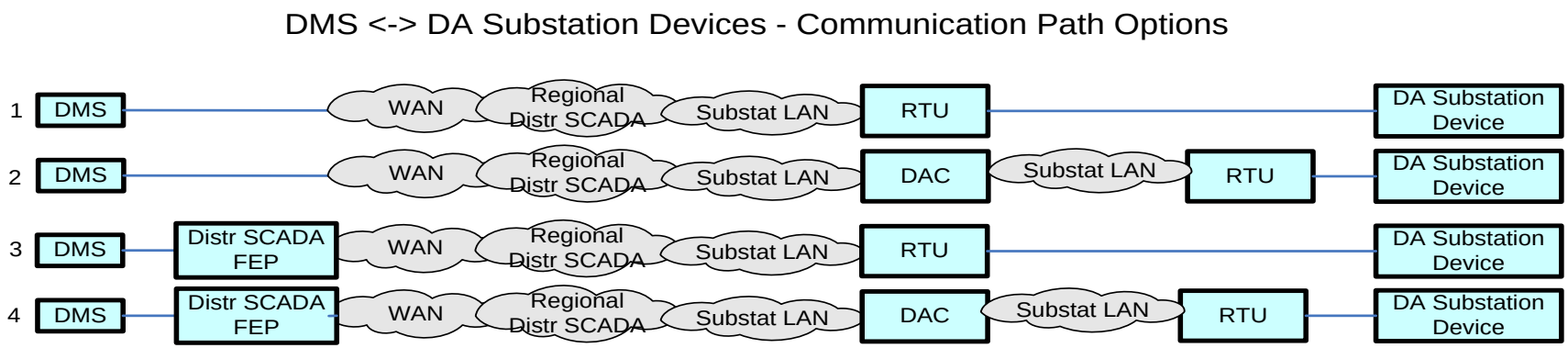

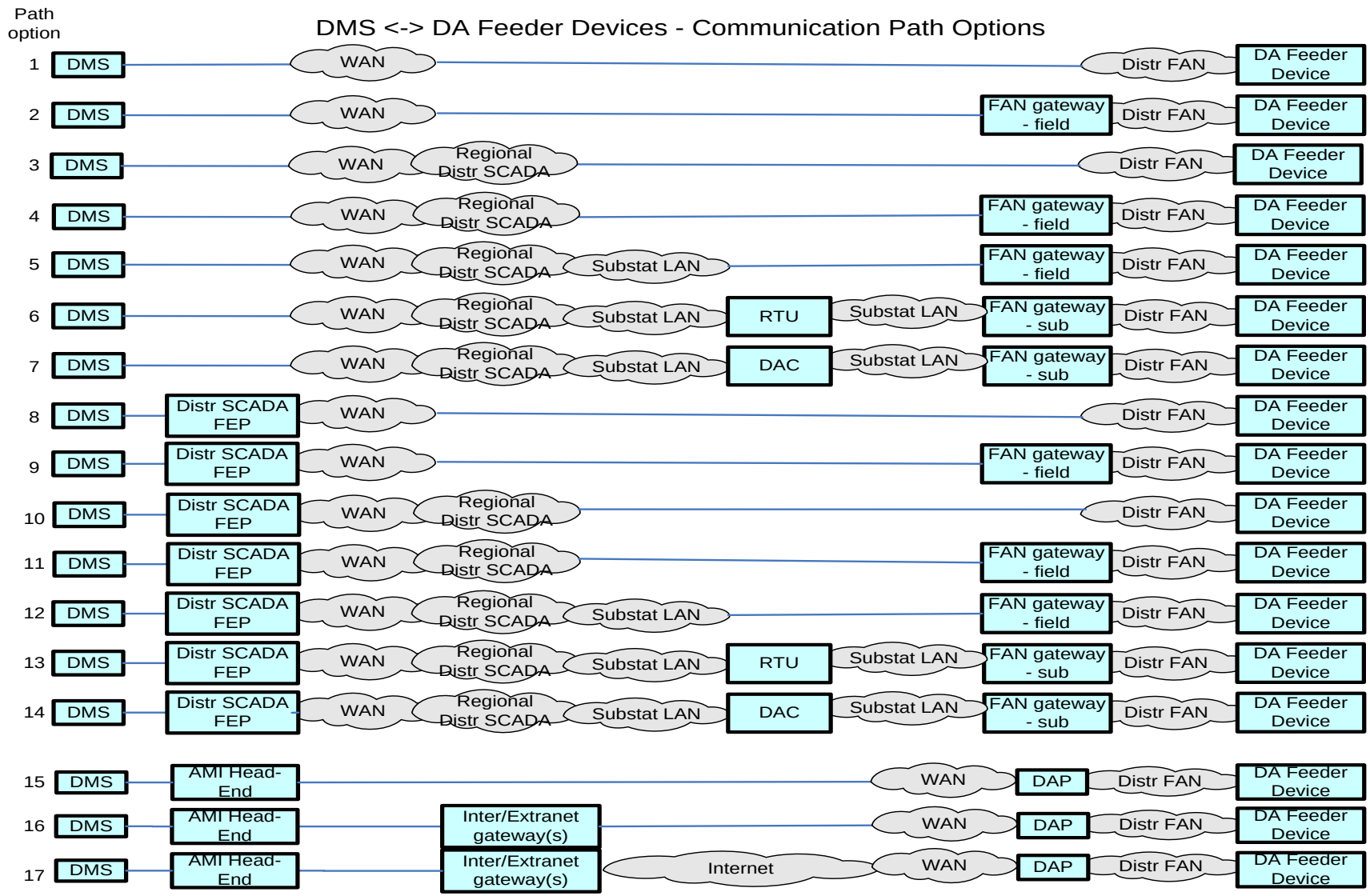
DMS <-> DA Feeder Devices - Communication Path Options
Path option
1
2
3
4
5
6
7
8
9
10
11
12
13
14
15
16
17
DMS
WAN
Regional Distr SCADA
Substat LAN
RTU
DAC
Distr SCADA FEP
FAN gateway - field
FAN gateway - sub
Distr FAN
DA Feeder Device
AMI Head-End
Inter/Extranet gateway(s)
Internet
DAP

1039

5.5.2 Actors

Actor	Description
Common Web Portal	Web interface for Regional Transmission Operator, customers, retail electric providers and transmission/distribution service provider to function as a clearing house for energy information.
Cust. Browser - Mobile	A mobile device World Wide Web compliant internet browser (e.g. Internet Explorer, Google Chrome, Safari, Mozilla Firefox) used by a customer.
Cust. Browser - Premise	A World Wide Web compliant internet browser (e.g. Internet Explorer, Google Chrome, Safari, Mozilla Firefox) used within a customer's premises.
Internet / Extranet gateway(s) - REPi	These are gateways used to connect internal utility networks with external networks.
Internet / Extranet gateway(s) - Utility	These are gateways used to connect internal utility networks with external networks.
ODW - REPi	REPi's Operational Data Warehouse
ODW - Utility	Utility's Operational Data Warehouse
Web Portal – REPi	REPi's Web interface for Regional Transmission Operator, customers, retail electric providers and transmission/distribution service provider to function as a clearing house for energy information. Commonly used in deregulated markets.
Web Portal – Utility	Utility's Web interface for Regional Transmission Operator, customers, retail electric providers and transmission/distribution service provider to function as a clearing house for energy information. Commonly used in deregulated markets.

5.5.3 Applicable Payload Information

Payload Name	Description	CSWG LICs	C-I-A	Confidentiality	Integrity	Availability
circuit-brk_device_status_cmd	DAC sends device status request to circuit breaker	2, 4	L-H-M	None to minimal harm to customer or organization for access to/disclosure of payload data	Incorrect device ID and command code could cause either the correct device to attempt to perform an inappropriate action or the wrong device to perform an action all of which may lead to unsafe or malfunction operation of the distribution grid that may have severe to catastrophic harm to the Utility and/or Customer	Latent and un-reliable connections may lead insufficient data for application to determine zone-isolation/circuit-reconfig actions, which might lead to more customers being without power than necessary
circuit-brk_status_resp-data	circuit breaker sends device status to DAC	2, 4	L-H-M	None to minimal harm to customer or organization for access to/disclosure of payload data	Incorrect device ID and response data could cause the distribution grid to malfunction in a dangerous manner potentially causing significant impact (especially if follow-up device status checks for missing response data not implemented) to the Utility and the Customer financials	Latent and un-reliable connections may lead insufficient data for application to determine zone-isolation/circuit-reconfig actions, which might lead to more customers being without power than necessary
distr_cust_storage_charge-rate_cmd	DAC sends specific charge-rate request to Distr Cust Storage device	2, 4	L-M-M	None to minimal harm to customer or organization for access to/disclosure of payload data	Incorrect device ID charging-rate-value and command code could cause the distribution grid to malfunction in a dangerous manner potentially causing serious harm to Utility (if in -scale) and minimum to serious harm to Customer	Latent and un-reliable connections could cause the operation requested to seriously harm the electric network
distr_cust_storage_charge-rate_cmd_ack	Distr Cust Storage device sends charge-rate command receipt/command initiation acknowledgement to DAC	2, 4	L-M-M	None to minimal harm to customer or organization for access to/disclosure of payload data	Incorrect device ID and acknowledgement code could cause the distribution grid to be operated in an unsafe/unstable manner potentially causing serious impact (if in-scale) to the Utility and the Customer financials	Latent and un-reliable connections could cause serious impacts if the operator of the network does not understand the state of the electric grid
distr_cust_storage_discharge_cmd	DAC sends specific discharge request to Distr Cust Storage device	2, 4	L-M-M	None to minimal harm to customer or organization for access to/disclosure of payload data	Incorrect device ID charging-rate-value and command code could cause the distribution grid to malfunction in a dangerous manner potentially causing serious harm to utility (if in -scale) and minimum to serious harm to Customer	Latent and un-reliable connections could cause the operation requested to seriously harm (if in-scale) the electric network

Payload Name	Description	CSWG LICs	C-I-A	Confidentiality	Integrity	Availability
distr_cust_storage_discharge_cmd_ack	Distr Cust Storage device sends discharge command receipt/command initiation acknowledgement to DAC	2, 4	L-M-M	None to minimal harm to customer or organization for access to/disclosure of payload data	Incorrect device ID and acknowledgement code could cause the distribution grid to be operated in an unsafe/unstable manner potentially causing serious impact (if in-scale) to the Utility and the Customer financials	Latent and un-reliable connections could cause serious impacts (if in-scale) if the operator of the network does not understand the state of the electric grid
distr_cust_storage_status_cmd	DAC sends device status request to specific Distr Cust Storage device	2, 4	L-H-M	None to minimal harm to customer or organization for access to/disclosure of payload data	Incorrect device ID and command code could cause the distribution grid to malfunction in a dangerous manner potentially causing severe impact (if in-scale) to the Utility and the Customer financials	Latent and un-reliable connections could cause serious impact if the operator of the network does not understand the state of the electric grid
distr_cust_storage_status_resp-data	Distr Cust Storage device sends device status data to DAC and is relayed to Operations actors	2, 4	L-H-M	None to minimal harm to customer or organization for access to/disclosure of payload data	Incorrect device ID and response data could cause the distribution grid to malfunction in a dangerous manner potentially causing severe impact (if in scale) to the Utility and the Customer financials	Latent and un-reliable connections could cause serious impact if the operator of the network does not understand the state of the electric grid

5.5.4 Scenarios

5.5.4.1 Scenario: Dispatch Distributed Customer Storage

Narrative

The Utility has need to provide for any combination of: peak load shaving, voltage support, power quality, demand control on a specific Distribution feeder circuit and/or specific clusters of customers served by that feeder circuit. This scenario includes both the discharge of the Distributed Customer Storage devices to accomplish the needs above and to charge the Distributed Customer Storage devices after their discharge. The DAC is the actor carrying out these functions as directed and programmed by Distribution Operations.

Business Objectives

The DAC - sub polls the Feeder Circuit Breaker with the circuit-brk_device_status_cmd in the substation through the master RTU. The Feeder Circuit Breaker responds with the circuit-brk_status_resp-data payload.

Payload Name	Payload Type	Payload Attributes	PAP02 Baseload (routine)	PAP02 Highload (full load)	Originating Actor	Destination Actor	Reliability	Latency	When	How Often	Payload Size
circuit-brk_device_status_cmd	cmd	device ID, command code	X	X	DAC - sub	Feeder Circuit Breaker	> 99.5%	< 2 sec	24x7	288 per | Sub(x)DAC-fdrCrtBrk per | day	25
circuit-brk_status_resp-data	resp-data	device ID, response data	X	X	Feeder Circuit Breaker	DAC - sub	> 99.5%	< 2 sec	24x7	288 per | Sub(x)DAC-fdrCrtBrk per | day	50

The DAC –sub polls the Distribution Customer Storage Device (Dist. Cust. Storage) with the distr_cust_storage_status_cmd payload on a pre-determined schedule. The Storage device responds with the distr_cust_storage_status_resp-data payload with the capacity and availability of energy of each storage device. The DAC – sub sends this distr_cust_storage_status_resp-data payload to the DMS

Payload Name	Payload Type	Payload Attributes	PAP02 Baseload (routine)	PAP02 Highload (full load)	Originating Actor	Destination Actor	Reliability	Latency	When	How Often	Payload Size
distr_cust_storage_status_cmd	cmd	device ID, command code	X	X	DAC - sub	Distr. Cust. Storage	> 99.5%	< 5 sec	24x7	288 per | Sub(x)DAC-Sub(x)FANgw-fdrDCS per | day	25
distr_cust_storage_status_resp-data	resp-data	device ID, response data	X	X	Distr. Cust. Storage ,DAC - sub	DAC - sub,DAC - Ops/Regnl, DMS, Analytic DB	> 99.5%	< 5 sec,< 4 sec	24x7	288 per | Sub(x)DAC-Sub(x)FANgw-fdrDCS per | day	50

Based on the values received and the pre-condition that the DAC–sub has been ordered to participate in load following mode, the DAC - Sub sends to distr_cust_storage_discharge_cmd payload to the appropriate Distribution Customer Storage Devices. Upon receipt of this payload the Distribution Customer Storage Devices shall send the distr_cust_storage_discharge_cmd_ack payload to the DAC – sub.

Payload Name	Payload Type	Payload Attributes	PAP02 Baseload (routine)	PAP02 Highload (full load)	Originating Actor	Destination Actor	Reliability	Latency	When	How Often	Payload Size
distr_cust_storage_discharge_cmd	cmd	device ID, command code	X	X	DAC - sub	Distr. Cust. Storage	> 99.5%	< 5 sec	5AM - 9AM or 3PM - 7PM	2-6 per | Sub(x)DAC-Sub(x)FANgw-fdrDCS per | dispatch-period per day	25
distr_cust_storage_discharge_cmd_ack	ack	device ID, acknowledgement code	X	X	Distr. Cust. Storage	DAC - sub	> 99.5%	< 5 sec	5AM - 9AM or 3PM - 7PM	2-6 per | Sub(x)DAC-Sub(x)FANgw-fdrDCS per | dispatch-period per day	25

When the situation is optimal, the DMS in coordination with the DAC–sub, the DAC-sub sends the distr_cust_storage_charge-rate_cmd to the Distribution Customer Storage Devices to re-charge the batteries of these devices if needed. Upon Receipt of this payload the Distribution Customer Storage Device shall send the distr_cust_storage_charge-rate_cmd_ack payload to the DAC-sub.

Payload Name	Payload Type	Payload Attributes	PAP02 Baseload (routine)	PAP02 Highload (full load)	Originating Actor	Destination Actor	Reliability	Latency	When	How Often	Payload Size
distr_cust_storage_charge-rate_cmd	cmd	device ID, command code, charging-rate-value	X	X	DAC - sub	Distr. Cust. Storage	> 99.5%	< 5 sec	10pm - 5am	2-4 per | Sub(x)DAC-Sub(x)FANgw-fdrDCS per | charge-period per day	25
distr_cust_storage_charge-rate_cmd_ack	ack	device ID, acknowledgement code	X	X	Distr. Cust. Storage	DAC - sub	> 99.5%	< 5 sec	10pm - 5am	2-4 per | Sub(x)DAC-Sub(x)FANgw-fdrDCS per | charge-period per day	25

5.5.4.2 Scenario: Islanded Distributed Customer Storage

Narrative

This scenario covers the situation where power has been lost to the portion of a feeder circuit that has attached Distributed Customer Service devices that can provide for temporary finite amount of power for a limited amount of time. This scenario is also premised on a close affinity between the customer loads that can be sourced from the deployed Distributed Customer Storage devices and the 2-way Meter – Electr. When the Distribution Customer Storage goes into islanded mode due to power outage, the distr_cust_storage_in-island-mode_alarm payload is sent to the DAC-sub. This payload is then sent to the Distribution SCADA system and other systems in the enterprise including: DMS, OMS, Analytic DB and LMS-Utility. Next, the on_distr-cust-strg_alarm is sent to the customer notifying them that they are on batter power and to conserve energy. When power is restored, the distr_cust_storage_out-of-island-mode_alert payload is sent to the DAC-sub. This payload is then sent to the Distribution SCADA system and other systems in the enterprise including: DMS, OMS, Analytic DB and LMS-Utility.

Note: The reliability, and latency requirements between some of the Originating Actors and the Destination Actors due to the amount of load affected by the actors role. The table after the business objectives table calls out these details.

Business Objectives

Payload Name	Payload Type	Payload Attributes	PAP02 Baseload (routine)	PAP02 Highload (full load)	Originating Actor	Destination Actor	Reliability	Latency	When	How Often	Payload Size
distr_cust_storage_in-island-mode_alarm	alarm	device ID, alarm code	X	X	Distr. Cust. Storage, Distr. SCADA FEP, Distr. Cust. Storage, DAC - Ops/Regnl	DAC - sub, Distr. SCADA FEP, DAC - Ops/Regnl, DMS, OMS, Analytic DB, LMS - Utility	> 99.5%, > 98%	< 8 sec, < 4 sec, < 6 sec	24x7	1 per | FANgw(x)-fdrDCS per | detected transformer lose of power event,1 per | fdrDCS per | detected transformer lose of power event	50

Payload Name	Payload Type	Payload Attributes	PAP02 Baseload (routine)	PAP02 Highload (full load)	Originating Actor	Destination Actor	Reliability	Latency	When	How Often	Payload Size
distr_cust_storage_out-of-island-mode_alert	alert	device ID, alert code	X	X	Distr. Cust. Storage,Distr. SCADA FEP,Distr. Cust. Storage, DAC - Ops/Regnl	DAC - sub, Distr. SCADA FEP,DAC - Ops/Regnl, DMS, OMS, Analytic DB,LMS - Utility	> 99.5%,> 98%	< 8 sec,< 4 sec,< 6 sec	24x7	1 per | fdrDCS per | detected transformer restore of power event,1 per | Sub(x)DAC-Sub(x)FANgw-fdrDCS per | detected transformer restore of power event	50

1102

Originating Actor	Destination Actor	Latency	Reliability	Payload Size - bytes	Payload Name
Distr. Cust. Storage	DAC - sub, Distr. SCADA FEP	< 8 sec	> 99.5%	50	distr_cust_storage_in-island-mode_alarm
Distr. SCADA FEP	DAC - Ops/Regnl, DMS, OMS, Analytic DB	< 4 sec	> 99.5%	50	distr_cust_storage_in-island-mode_alarm
Distr. Cust. Storage, DAC - Ops/Regnl	LMS - Utility	< 6 sec	> 98%	50	distr_cust_storage_in-island-mode_alarm
LMS – Utility	IPD, Cust. EMS, MDMS	< 12 sec	> 98%	50 - 150	on_distr-cust-strg_alarm[2]
Sub-Totals		< 22 sec	> 96%	100 - 200	

- [2] this is a new requirement row and payload incremental to Requirements Table R5.1

Originating Actor	Destination Actor	Latency	Reliability	Payload Size - bytes	Payload Name
Distr. Cust. Storage	DAC - sub, Distr. SCADA FEP	< 8 sec	> 99.5%	50	distr_cust_storage_out-of-island-mode_alert
Distr. SCADA FEP	DAC - Ops/Regnl, DMS, OMS, Analytic DB	< 4 sec	> 99.5%	50	distr_cust_storage_out-of-island-mode_alert
Distr. Cust. Storage, DAC - Ops/Regnl	LMS - Utility	< 6 sec	> 98%	50	distr_cust_storage_out-of-island-mode_alert
LMS - Utility	IPD, Cust. EMS, MDMS	< 12 sec	> 98%	50 - 150	off_distr_cust_strg_alert2
Sub-Totals		< 22 sec	> 96%	100 - 200	

5.5.4.3 Scenario: Capped Customer Energy Usage

Narrative

This scenario covers the situation where power has been lost to the portion of a feeder circuit that has attached Distributed Customer Service devices that can provide for temporary finite amount of power for a limited amount of time. This scenario is also premised on a close affinity between the customer loads that can be sourced from the deployed Distributed Customer Storage devices and the 2-way Meter – Electr. for placing the meter into a capped energy/load usage mode and then to take the meter out of that capped energy/load usage after power has been restored.

Business Objectives

When the power outage portion of the Islanded Distribution Customer Storage scenario occurs, the Energy Supplier sends the meter_capped_kwh_mode_cmd payload to the 2-Way Meter-Electr. The 2-Way Meter-Electr shall respond with the meter_capped_kwh_mode_cmd_ack when that payload is received and shall send the meter_in_capped_kwh_mode_alert payload to in Customer Premises devices in order for the customer to know about the situation.

Payload Name	Payload Type	Payload Attributes	PAP02 Baseload (routine)	PAP02 Highload (full load)	Originating Actor	Destination Actor	Reliability	Latency	When	How Often	Payload Size
meter_capped_kwh_mode_cmd	Cmd	Meter ID, command code	X	X	LMS - Utility	2-Way Meter - Electr	> 98%	< 12 sec	24x7	4-6 per | fdrDCS per | detected transformer lose of power event	25
meter_capped_kwh_mode_cmd_ack	Ack	Meter ID, acknowledgement code	X	X	2-Way Meter - Electr	LMS - Utility, MDMS	> 98%	< 12 sec	24x7	1 per | ElectrMtr per | processed capped kwh mode cmd	25
meter_in_capped_kwh_mode_alert	Alert	Meter ID, alert code, alert text	X	X	2-Way Meter - Electr	IPD, Cust. EMS, MDMS	> 98%	< 12 sec	24x7	1 per | ElectrMtr-with-IPD-or-CustEMS per |	50 - 150

Payload Name	Payload Type	Payload Attributes	PAP02 Baseload (routine)	PAP02 Highload (full load)	Originating Actor	Destination Actor	Reliability	Latency	When	How Often	Payload Size
										capped kwh mode cmd	

When the power restoration portion of the Islanded Distribution Customer Storage scenario occurs, the Energy Supplier sends the meter_capped_kwh_mode_cancel_cmd payload to the 2-Way Meter-Electr. The 2-Way Meter-Electr shall respond with the meter_capped_kwh_mode_cancel_cmd_ack when that payload is received and shall send the meter_out_of_capped_kwh_mode_alert payload to in Customer Premises devices in order for the customer to know about the situation.

Payload Name	Payload Type	Payload Attributes	PAP02 Baseload (routine)	PAP02 Highload (full load)	Originating Actor	Destination Actor	Reliability	Latency	When	How Often	Payload Size
meter_capped_kwh_mode_cancel_cmd	cmd	Meter ID, command code	X	X	LMS - Utility	2-Way Meter - Electr	> 98%	< 12 sec	24x7	4-6 per | fdrDCS per | detected transformer restore of power event	25
meter_capped_kwh_mode_cancel_cmd_ack	ack	Meter ID, acknowledgement code	X	X	2-Way Meter - Electr	LMS - Utility, MDMS	> 98%	< 12 sec	24x7	1 per | ElectrMtr per | capped kwh mode cancel cmd	25
meter_out_of_capped_kwh_mode_alert	alert	Meter ID, alert code, alert text	X	X	2-Way Meter - Electr	IPD, Cust. EMS, MDMS	> 98%	< 12 sec	24x7	1 per | ElectrMtr per | in-capped kwh mode cancel cmd	50 - 150

5.6 Demand Response

5.6.1 Overview

The Demand Response and Load Control use cases described in this body of work include the following scenarios. For each scenario the primary command, response and failure payloads are described.

- Load Management Requests and Request Acknowledgements
- Load Management Request Opt Outs
- Voluntary Load Management Requests and Request Acknowledgments

5.6.1.1 Reference Architecture with Domains, Actors, and Interfaces

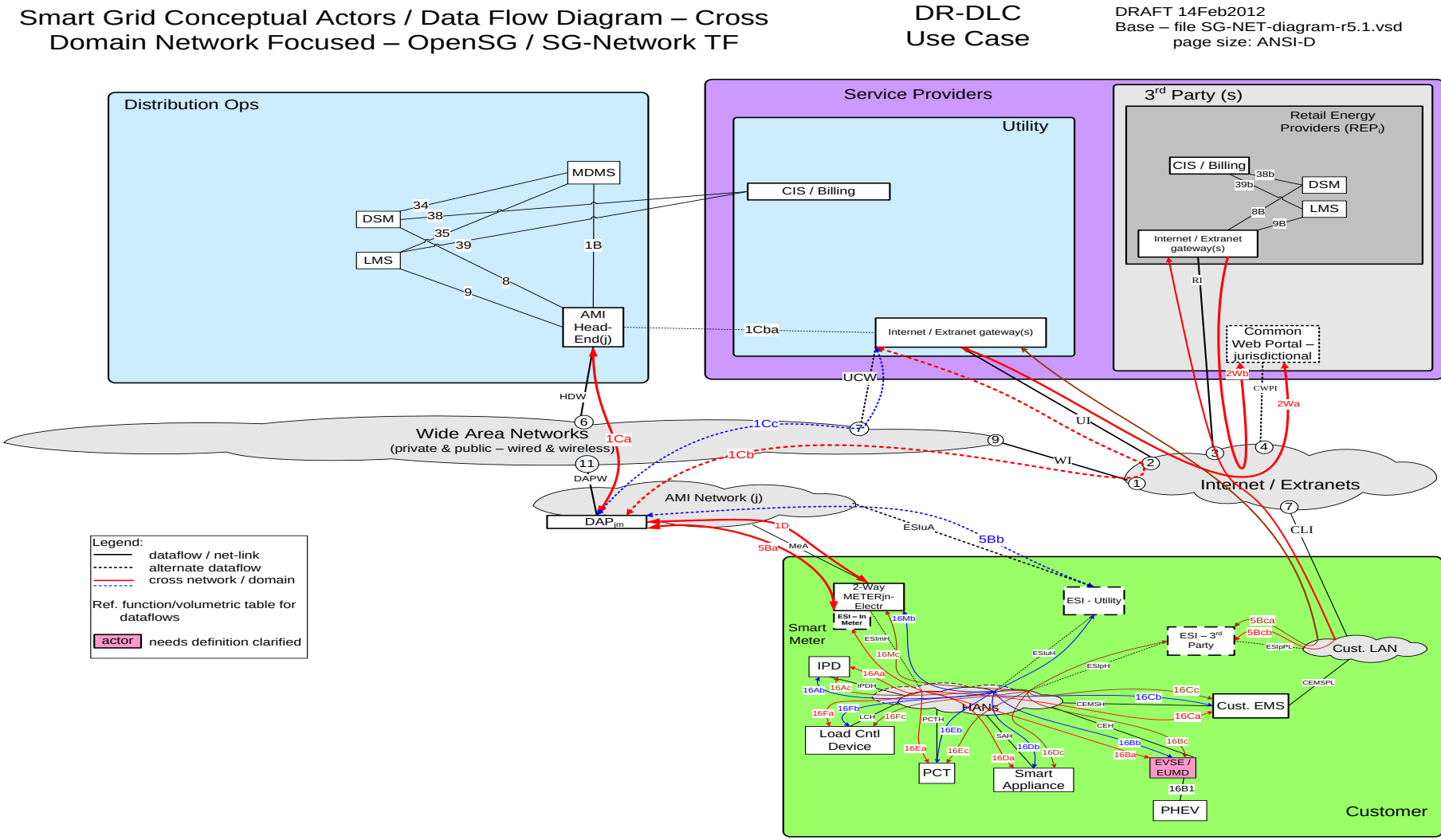

5.6.1.2

Possible Telecommunications Paths

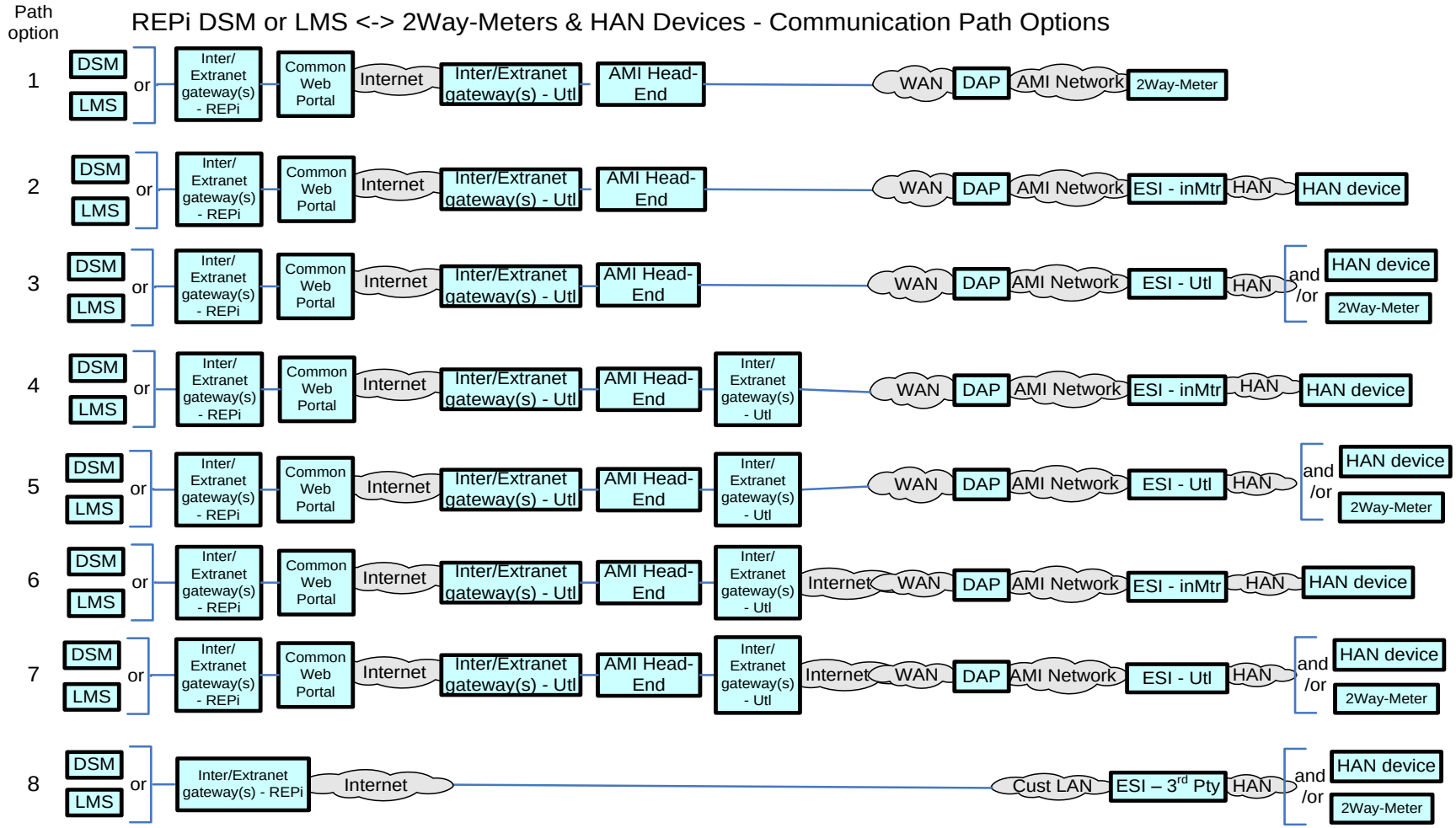

5.6.2 Actors

Actor	Description
2-Way Meter – Electr	A bi-directional communication device used to perform measurement of electrical energy usage for residential use.
AMI Head-End(j)	The AMI head end is responsible for the operation and coordination of AMI system components. It represents the central nervous system of the AMI system.
Common Web Portal	Web interface for Regional Transmission Operator, customers, retail electric providers and transmission/distribution service provider to function as a clearing house for energy information.
Cust. EMS	A customer owned energy management system used to manage energy with a premises.
DAPjm	This is the Data Aggregation Point on the NAN. It is essentially the point of convergence for all communication between SG devices and utility back office systems. In this specific use case it provides a communication conduit for AMI Smart Meters.
DSM – REPi	Demand Side Management - Retail Energy Provider; A system that co-ordinates demand response / load shedding messages indirectly to devices (e.g. Set point adjustment)
DSM – Utility	Demand Side Management - Utility; A system that co-ordinates demand response / load shedding messages indirectly to devices (e.g. Set point adjustment)
ESI - 3rd Party	An ESI, owned by the Customer and not provided by the Utility, which enables secure interactions between HAN Devices Registered on its network and the service provider e.g. REP. The 3rd Party ESI functionality may reside in the Customer EMS or customer's
ESI - In Meter	An ESI, owned by the Utility and resides in the Utility meter, which enables secure interactions between HAN Devices Registered on its network and the Utility AMI.
ESI – Utility	An ESI, owned by the Utility, which enables secure interactions between HAN Devices Registered on its network and the Utility AMI. The Utility ESI functionality may reside in the Customer EMS or customer broadband router.
EVSE / EUMD	Electric Vehicle Supply Equipment / End Use Metering Device
Internet / Extranet gateway(s) - REPi	These are gateways used to connect internal utility networks with external networks.
Internet / Extranet gateway(s) - Utility	These are gateways used to connect internal utility networks with external networks.
IPD	In Premise Display
LMS – REPi	Load management system
LMS – Utility	Load management system - System that controls load by sending messages directly to device (e.g. On/Off)
Load Cntl Device	A device used within the customer domain for load management (e.g. Air conditioning, etc)

Actor	Description
PCT	A device within the premise that has communication capabilities and controls heating, ventilation and cooling systems.
PHEV	Plug-in Hybrid Electric Vehicles - Cars or other vehicles that draw electricity from batteries to power an electric motor for vehicle propulsion. PHEVs also contain an internal combustion engine.
Smart Appliance	A white good or household appliance, that has HAN communication capability and is capable of receiving signals from authorized parties (e.g. Utility, Service Provider, EMS, Consumer, etc.) and of adjusting its operational mode based on Consumer preference

5.6.3 Applicable Payload Information

Payload Name	Description	CSWG LICs	C-I-A	Confidentiality	Integrity	Availability
Load_mgm_opt_out	HAN device sends message to LMS or DSM that Customer declined participation in load control event.	13, 15/16	L-M-M	None to minimal harm to customer or organization for access to/disclosure of payload data	An incorrect device id/mac address and opt-out event id may cause the utility to not understand the correct customer opted out of the load control event and possibly penalize the wrong customer for opt-in out too many times	Receipt of these messages need to completed in a reasonable time but are not critical
Load_mgm_req_ack	HAN device sends message to LMS or DSM acknowledging customer HAN deive received the load management event.	13, 15/16	L-M-M	None to minimal harm to customer or organization for access to/disclosure of payload data	Caller of the load management event needs to understand the message is properly received by the intended devices	Receipt of these messages need to completed in a reasonable time but are not critical
Load_mgm_reqst	LMS or DSM sends a load management event message to HAN device	13, 15/16	L-H-M	None to minimal harm to customer or organization for access to/disclosure of payload data	These messages need to be properly attributed to the Energy Service Provider that sent them	Receipt of these messages need to completed in a reasonable time
Load_mgm_reqst_brdcst	LMS or DSM sends a broadcasted load management event to customers HAN device of a planned event.	13, 15/16	L-H-M	None to minimal harm to customer or organization for access to/disclosure of payload data	These messages need to be properly attributed to the Energy Service Provider that sent them	Receipt of these messages need to completed in a reasonable time
Load_mgm_reqst_mltcst	LMS or DSM sends a multicast load management event notifying specific group of customers' HAN devices of a planned event.	13, 15/16	L-H-M	None to minimal harm to customer or organization for access to/disclosure of payload data	These messages need to be properly attributed to the Energy Service Provider that sent them	Receipt of these messages need to completed in a reasonable time
Vol_load_shed_req_ack	IHD or Cust EMS or PCT sends message to LMS or DSM acknowledging customer IHD, Cust EMS, or PCT received the load management event.	13, 15/16, 18	L-M-M	None to minimal harm to customer or organization for access to/disclosure of payload data	Caller of the load management event needs to understand the message is properly received by the intended devices	Receipt of these messages need to completed in a reasonable time but are not critical
Vol_load_shed_reqst	LMS or DSM sends notification of voluntary load shed opportunity to Meter, IHD, Cust EMS..	13, 15/16, 18	L-H-M	None to minimal harm to customer or organization for access to/disclosure of payload data	These messages need to be properly attributed to the Energy Service Provider that sent them	Receipt of these messages need to completed in a reasonable time
Vol_load_shed_reqst_brdcst	LMS or DSM sends notification of voluntary load shed opportunity to a large group of meters, IHD, Cust EMS.	13, 15/16, 18	L-H-M	None to minimal harm to customer or organization for access to/disclosure of payload data	These messages need to be properly attributed to the Energy Service Provider that sent them	Receipt of these messages need to completed in a reasonable time

Payload Name	Description	CSWG LICs	C-I-A	Confidentiality	Integrity	Availability
Vol_load_shed_reqst_ mltcst	LMS or DSM sends notification of voluntary load shed opportunity to a specific group of meters, IHD, Cust EMS.	13, 15/16, 18	L-H-M	None to minimal harm to customer or organization for access to/disclosure of payload data	These messages need to be properly attributed to the Energy Service Provider that sent them	Receipt of these messages need to completed in a reasonable time

5.6.4 Scenarios

5.6.4.1 Scenario: Load Management Requests and Request Acknowledgements

Narrative

In this scenario, the event originates at the Load Management System or Demand Side Management system where it is transferred to the AMI head-end for transmission to the ESI. This message may be unicast, multicast or broadcast depending upon the given capabilities of a specific system and the needed load reduction.

Transmission to the ESI can occur through the DAP via the AMI network, or alternatively, through the Internet/Extranet gateway via the Internet/Extranets.

From the ESI, the message is forwarded to the appropriate HAN device (IHD, PCT, Appliance, PHEV, etc). The HAN device will acknowledge the receipt of the information and initiate the appropriate action, e.g., adjust its load based on the current price tier.

The acknowledgement typically follows the reverse path to the LMS or DSM, i.e. via the AMI network through the DAP to the AMI Headend, or alternatively, via the Internet/Extranets through the Internet/Extranet gateway DAP to the AMI Headend, from where the message is then forwarded to LMS or DSM. Some utilities require acknowledgement of receipt of the load management request. Acknowledgement may come from the device automatically or from a user interface.

Business Objectives

Payload Name	Payload Type	Payload Attributes	PAP02 Baseload (routine)	PAP02 Highload (full load)	Originating Actor	Destination Actor	Reliability	Latency	When	How Often	Payload Size
Load_mgm_req_ack	ack	device ID, mac address, acknowledgement code, event ID, estimation of load reduction	0	X	2-Way Meter - Electr, IPD, Cust. EMS, PCT, PHEV, Smart Appliance, Load Cntl Device	LMS - Utility,DSM - Utility,LMS - REPi,DSM - REPi	90% success every 4-6 hr, 98% success over 1 day, > 99.5% over 2 day	< 4 hr (expected window of data delivery)	24x7	x per 1000 per | Utl-joined-DRDLC-HANdevice per | LMS - Utl Load Mgmt event,x per 1000 per | Utl-joined-DRDLC-HANdevice per | DSM - Utl Load Mgmt event,x per 1000 per | REPi-joined-DRDLC-HANdevice per | LMS - REPi Load Mgmt event,x per 1000 per | REPi-joined-DRDLC-HANdevice per | DSM - REPi Load Mgmt event	25
Load_mgm_reqst	cmd	device ID, mac_address, event ID, event time and duration, randomization value for start and stop, load adjustment percentage, maximum duty cycle, criticality level,	0	X	LMS - Utility,DSM - Utility,LMS - REPi,DSM - REPi	2-Way Meter - Electr, IPD, Cust. EMS, PCT, PHEV, Smart Appliance, Load Cntl Device	> 98%	< 1 min	24x7	60 per 1000 per | Utl-joined-DRDLC-HANdevice per | day,60 per 1000 per | REPi-joined-DRDLC-HANdevice per | day	100

Payload Name	Payload Type	Payload Attributes	PAP02 Baseload (routine)	PAP02 Highload (full load)	Originating Actor	Destination Actor	Reliability	Latency	When	How Often	Payload Size
Load_mgm_reqst_brdcst	cmd	broadcast ID, event ID, event time and duration, randomization value for start and stop, load adjustment percentage, maximum duty cycle, criticality level,	0	X	LMS - Utility,DSM - Utility,LMS - REPi,DSM - REPi	2-Way Meter - Electr, IPD, Cust. EMS, PCT, PHEV, Smart Appliance, Load Cntl Device	> 99.5%	< 1 min	24x7	1 per | Utl-joined-DRDLC-HANdevice per | LMS - Utl load mgmt broadcast request event,1 per | Utl-joined-DRDLC-HANdevice per | DSM - Utl load mgmt broadcast request event,1 per | REPi-joined-DRDLC-HANdevice per | LMS - REPi load mgmt broadcast request event,1 per | REPi-joined-DRDLC-HANdevice per | DSM - REPi load mgmt broadcast request event	100

Payload Name	Payload Type	Payload Attributes	PAP02 Baseload (routine)	PAP02 Highload (full load)	Originating Actor	Destination Actor	Reliability	Latency	When	How Often	Payload Size
Load_mgm_reqst_mltcst	cmd	device group ID, event ID, event time and duration, randomization value for start and stop, load adjustment percentage, maximum duty cycle, criticality level,	0	X	LMS - Utility,DSM - Utility,LMS - REPi,DSM - REPi	2-Way Meter - Electr, IPD, Cust. EMS, PCT, PHEV, Smart Appliance, Load Cntl Device	> 98%	< 1 min	24x7	1 per | Utl-joined-DRDLC-HANdevice per | LMS - Utl load mgmt multicast request event,1 per | Utl-joined-DRDLC-HANdevice per | DSM - Utl load mgmt multicast request event,1 per | REPi-joined-DRDLC-HANdevice per | LMS - REPi load mgmt multicast request event,1 per | REPi-joined-DRDLC-HANdevice per | DSM - REPi load mgmt multicast request event	100

5.6.4.2 Scenario: Voluntary Load Management Requests and Request Acknowledgments

Narrative

Voluntary Load Shed Requests are used to communicate voluntary energy management requests to the end use consumer devices to manage load on the distribution network.

In this scenario, the request originates at the Load Management System or Demand Side Management system where it is transferred to the AMI head-end for transmission to the ESI.

Transmission from the AMI head-end to the ESI can occur in several ways:

- Via the WAN, through the DAP, via the AMI network
- through the Internet/Extranet gateway(s), via the Internet/Extranets and WAN, through the DAP via the AMI network
- through the Internet/Extranet gateway(s), via the Internet/Extranets and Customer LAN

From the ESI, the message is forwarded to the appropriate HAN device (Appliance, PHEV, Load control Device). The HAN device will acknowledge the receipt of the information and initiate the appropriate action.

The acknowledgement typically follows the reverse path to the LMS or DSM, i.e. via the AMI network through the DAP to the AMI Headend, or alternatively, via the Internet/Extranets through the Internet/Extranet gateway DAP to the AMI Headend, from where the message is then forwarded to LMS or DSM. Some utilities require acknowledgement of receipt of the voluntary load management request. Acknowledgement may come from the device automatically or from a user interface.

Business Objectives

Payload Name	Payload Type	Payload Attributes	PAP02 Baseload (routine)	PAP02 Highload (full load)	Originating Actor	Destination Actor	Reliability	Latency	When	How Often	Payload Size
Vol_load_shed_req_ack	ack	device ID, mac address, acknowledgement code, event ID, estimation of load reduction	0	X	IPD, Cust. EMS, PCT, PHEV, Smart Appliance, Load Cntl Device	LMS - Utility,DSM - Utility,LMS - REPi,DSM - REPi	90% success every 4-6 hr, 98% success over 1 day, > 99.5% over 2 day	< 4 hr (expected window of data delivery)	24x7	y per 1000 per | Utl-joined-HANdevice per | LMS - Utl vol-load-shed event,y per 1000 per | Utl-joined-HANdevice per | DSM - Utl vol-load-shed event,y per 1000 per | REPi-joined-HANdevice per | LMS - REPi vol-load-shed event,y per 1000 per | REPi-joined-HANdevice per | DSM - REPi vol-load-shed event	25

Payload Name	Payload Type	Payload Attributes	PAP02 Baseload (routine)	PAP02 Highload (full load)	Originating Actor	Destination Actor	Reliability	Latency	When	How Often	Payload Size
Vol_load_shed_reqst	cmd	device ID, command code, duration of event	0	X	LMS - Utility,DSM - Utility,LMS - REPi,DSM - REPi	IPD, Cust. EMS, PCT, PHEV, Smart Appliance, Load Cntl Device	> 98%	< 1 min	24x7	60 per 1000 per | Utl-joined-HANdevice per | LMS - Utl vol-load-shed-event,60 per 1000 per | Utl-joined-HANdevice per | DSM - Utl vol-load-shed-event,60 per 1000 per | REPi-joined-HANdevice per | LMS - REPi vol-load-shed-event,60 per 1000 per | REPi-joined-HANdevice per | DSM - REPi vol-load-shed-event	100

Payload Name	Payload Type	Payload Attributes	PAP02 Baseload (routine)	PAP02 Highload (full load)	Originating Actor	Destination Actor	Reliability	Latency	When	How Often	Payload Size
Vol_load_shed_reqst_brdcst	cmd	command code, duration of event	0	X	LMS - Utility,DSM - Utility,LMS - REPi,DSM - REPi	IPD, Cust. EMS, PCT, PHEV, Smart Appliance, Load Cntl Device	> 99.5%	< 1 min	24x7	1 per | Utl-joined-HANdevice per | LMS - Utl vol load shed broadcast request event,1 per | Utl-joined-HANdevice per | DSM - Utl vol load shed broadcast request event,1 per | REPi-joined-HANdevice per | LMS - REPi vol load shed broadcast request event,1 per | REPi-joined-HANdevice per | DSM - REPi vol load shed broadcast request event	100

Payload Name	Payload Type	Payload Attributes	PAP02 Baseload (routine)	PAP02 Highload (full load)	Originating Actor	Destination Actor	Reliability	Latency	When	How Often	Payload Size
Vol_load_shed_reqst_mltcst	cmd	group ID, command code, duration of event	0	X	LMS - Utility,DSM - Utility,LMS - REPi,DSM - REPi	IPD, Cust. EMS, PCT, PHEV, Smart Appliance, Load Cntl Device	> 98%	< 1 min	24x7	1 per | Utl-joined-HANdevice per | LMS - Utl vol load shed multicast request event,1 per | Utl-joined-HANdevice per | DSM - Utl vol load shed multicast request event,1 per | REPi-joined-HANdevice per | LMS - REPi vol load shed multicast request event,1 per | REPi-joined-HANdevice per | DSM - REPi vol load shed multicast request event	100

5.6.4.3 Scenario: Load Management Request Opt Outs

Narrative

In this scenario, the customer elects to not participate in a load control event. When this happens, a message gets sent back to the utility or third party service provider(e.g. REP, ISO, etc) indicating the opt out.

Business Objectives

Payload Name	Payload Type	Payload Attributes	PAP02 Baseload (routine)	PAP02 Highload (full load)	Originating Actor	Destination Actor	Reliability	Latency	When	How Often	Payload Size
Load_mgm_opt_out	cmd	device ID(s), mac address(s), event ID(s),		X	2-Way Meter - Electr, IPD, Cust. EMS, PCT, PHEV, Smart Appliance, Load Cntl Device	LMS - Utility,DSM - Utility,LMS - REPi,DSM - REPi	> 98%	< 1 min	24x7	10 per 1000 per | Utl-joined-DRDLC-HANdevice per | LMS - Utl Direct Load Mgmt Event,10 per 1000 per | Utl-joined-DRDLC-HANdevice per | DSM - Utl Direct Load Mgmt Event,10 per 1000 per | REPi-joined-DRDLC-HANdevice per | LMS - REPi Direct Load Mgmt Event,10 per 1000 per | REPi-joined-DRDLC-HANdevice per | DSM - REPi Direct Load Mgmt	25

Payload Name	Payload Type	Payload Attributes	PAP02 Baseload (routine)	PAP02 Highload (full load)	Originating Actor	Destination Actor	Reliability	Latency	When	How Often	Payload Size
										Event	

5.7 Electric Service Prepayment

5.7.1 Overview

The Electric Service Prepayment use cases described in this body of work include the following scenarios. For each scenario the primary command, response and failure payloads are described

- Customer Enrolls in a Prepayment program
- Customer Un Enrolls in a Prepayment program
- Prepayment Meter Configuration
- PrePay Messaging to Customer
- Customer Payments

The following scenarios are also included in this use case but details are found in other sections.

- Service Switch Operation
- Service Switch Operation Errors
- On-Demand Meter Read
- On-Demand Meter Read Errors

5.7.1.1 Reference Architecture with Domains, Actors and Interfaces

Smart Grid Conceptual Actors / Data Flow Diagram – Cross Domain Network Focused – OpenSG / SG-Network TF

PrePay Use Case

DRAFT 14Feb2012
Base – file SG-NET-diagram-r5.1.vsd
page size: ANSI-D

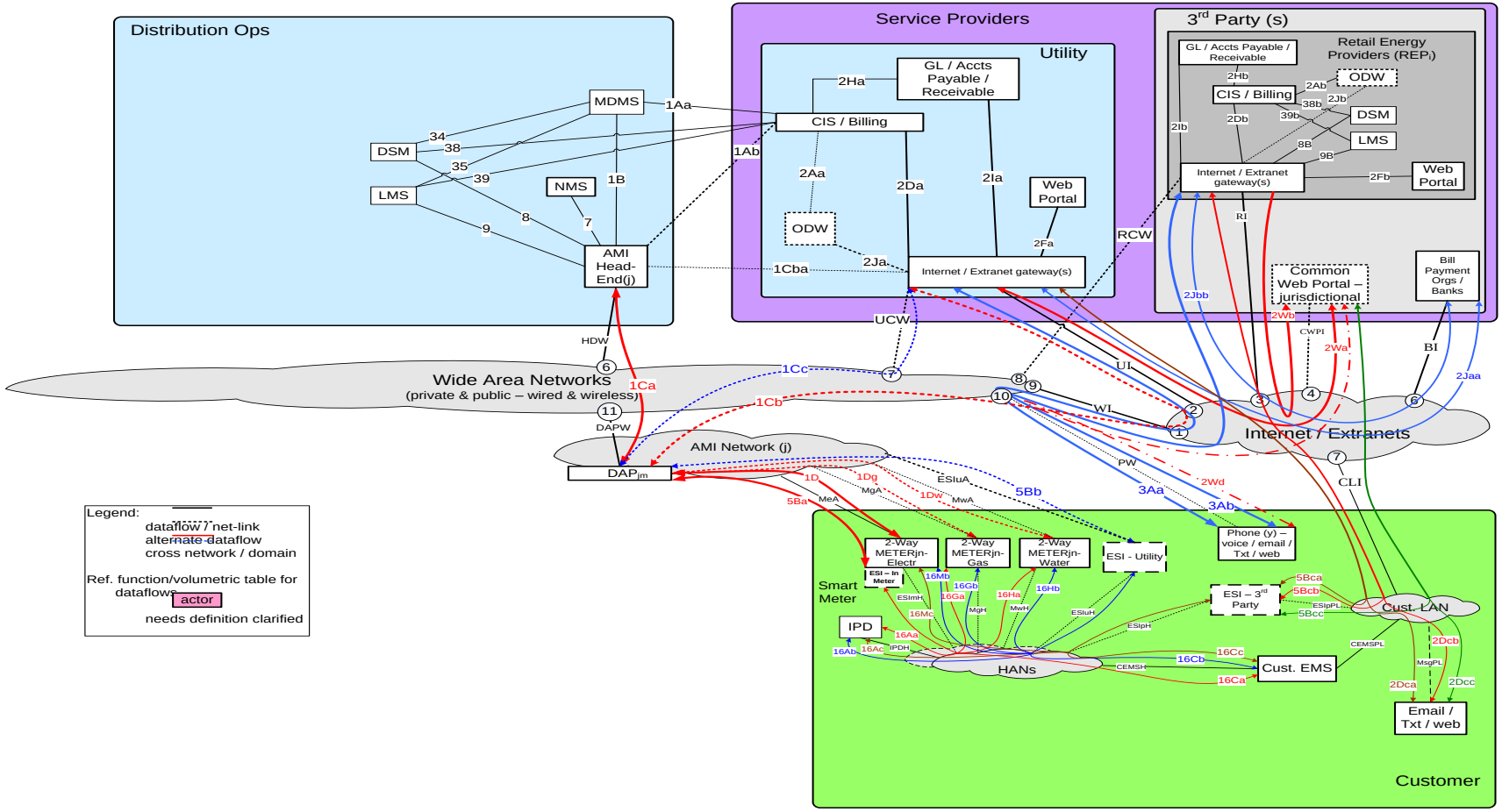

5.7.1.2 Possible telecommunications paths

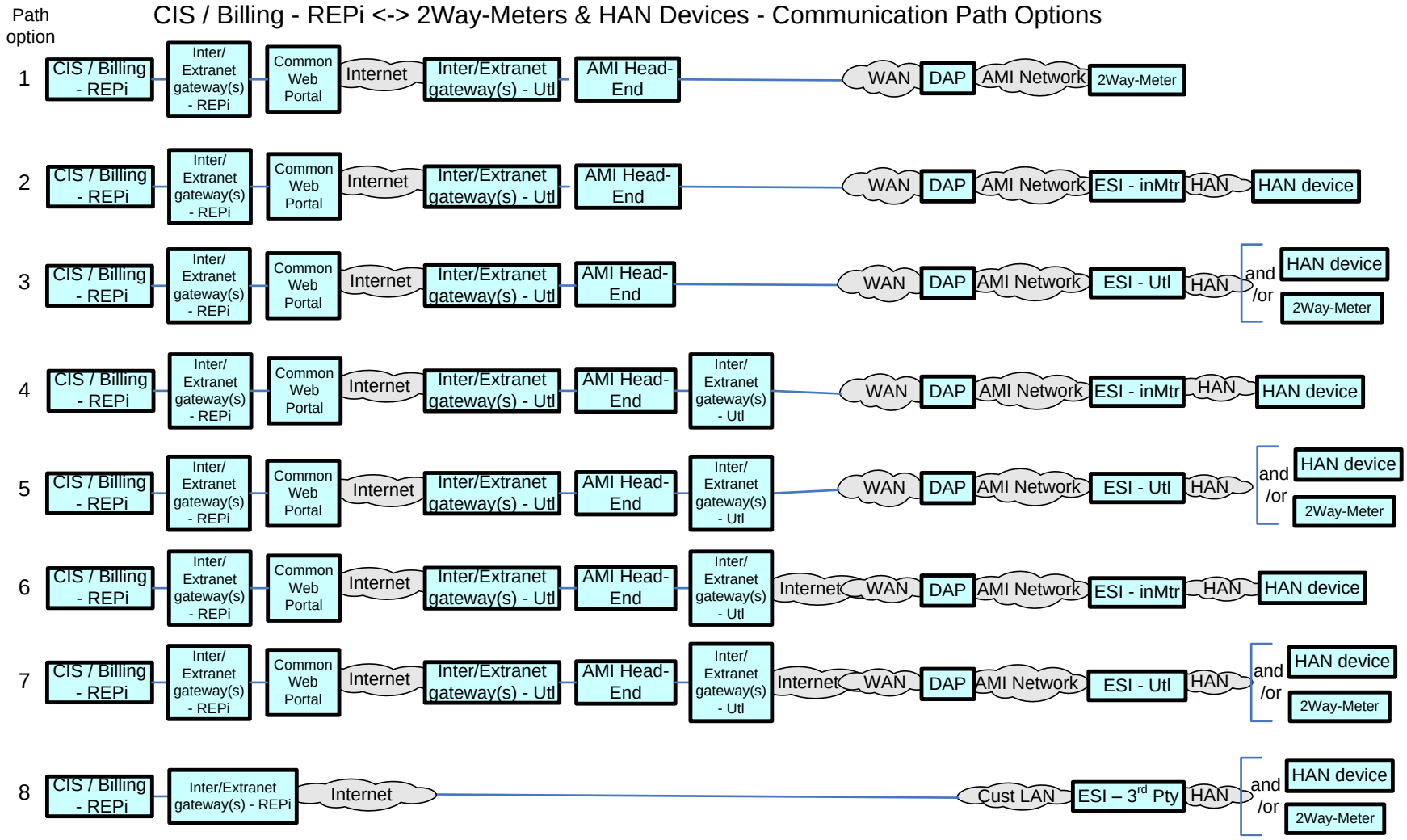

5.7.2 Actors

Actor	Description
2-Way Meter - Electr	A bi-directional communication device used to perform measurement of electrical energy usage for residential use.
2-Way Meter - Gas	A bi-directional communication device used to perform measurement of gas consumption for residential use.
2-Way Meter - Water	A bi-directional communication device used to perform measurement of water consumption for residential use.
AMI Head-End(j)	The AMI head end is responsible for the operation and coordination of AMI system components. It represents the central nervous system of the AMI system.
CIS/Billing - REPi	A third party billing system used for reconcilling customer payments for electricity usage. This system may also be used for managing vendors of electricity generation.
CIS/Billing - Utility	A utility billing system used for reconcilling customer payments for electricity usage. This system may also be used for managing vendors of electricity generation.
Common Web Portal	Web interface for Regional Transmission Operator, customers, retail electric providers and transmission/distribution service provider to function as a clearing house for energy information.
Cust. EMS	A customer owned energy management system used to manage energy with a premises.
DAPjm	This is the Data Aggregation Point on the NAN. It is essentially the point of convergence for all communication between SG devices and utility back office systems. In this specific use case it provides a communication conduit for AMI Smart Meters.
ESI - 3rd Party	An ESI, owned by the Customer and not provided by the Utility, which enables secure interactions between HAN Devices Registered on its network and the service provider e.g. REP. The 3rd Party ESI functionality may reside in the Customer EMS or customer's
ESI - In Meter	An ESI, owned by the Utility and resides in the Utility meter, which enables secure interactions between HAN Devices Registered on its network and the Utility AMI.
ESI - Utility	An ESI, owned by the Utility, which enables secure interactions between HAN Devices Registered on its network and the Utility AMI. The Utility ESI functionality may reside in the Customer EMS or customer broadband router.
Internet / Extranet gateway(s) - REPi	These are gateways used to connect internal utility networks with external networks.
Internet / Extranet gateway(s) - Utility	These are gateways used to connect internal utility networks with external networks.
IPD	In Premise Display
MDMS	The application responsible for the collection and retrieval of all relevant customer information for purposes of billing and facilitating interaction.
NMS	A system or series of systems that are utilized to operate and manage utility assets that interact on any given network. These assets are comprised of both hardware and software components that require ongoing monitoring and management.
Web Portal - REPi	Web interface for Regional Transmission Operator, customers, retail electric providers and transmission/distribution service provider to function as a clearing house for energy information. Commonly used in deregulated markets.

Actor	Description
Web Portal - Utility	Web interface for Regional Transmission Operator, customers, retail electric providers and transmission/distribution service provider to function as a clearing house for energy information. Commonly used in deregulated markets.

5.7.3 Applicable Payload Information

Payload Name	Description	CSWG LICs	C-I-A	Confidentiality	Integrity	Availability
on-demand_Mtr-read_cmd	CIS/Billing - Utility or IHD or Cust EMS sends command requesting adhoc consumption information from a single meter. Even though Meter is not a electric grid critical infrastructure component, this payload may be used in performing meter and telecomm network diagnostics.	13, 15, 18, 20	L-M-L	None to minimal harm to customer or organization for access to/disclosure of payload data	Inaccurate command parameters associated to a meter may lead to an incorrect data interpretation or next workflow process execution that may lead to a partial rebuild of stored data or a reprocessing (eg re-billing) for that meter, or customer taking incorrect action at the IHD or Custr EMS	Not receiving the response payload to the command would create missing data for a meter and may trigger an immediate retry, which if fails again may lead to customer frustration and/or complaint filed with jurisdiction
on-demand_Mtr-read_cmd_comm_err	IHD or Cust EMS or DAP or AMI Head-End sends message to MDMS, NMS, and/or CIS/Billing - Utility of issue with adhoc meter read request. Even though Meter is not a electric grid critical infrastructure component, this payload may be used in performing meter and telecomm network diagnostics.	13, 20	L-L-L	None to minimal harm to customer or organization for access to/disclosure of payload data	A false negative or false positive payload attributes associated to a specific meter may lead to an unnecessary health check of the meter and the telecomm network to the meter	Not receiving this payload to the command may lead to multiple repeated attempts to request the on-demand meter read, which may lead to a specific customers frustration and/or complaint filed with jurisdiction
on-demand_Mtr-read_cmd_err	Meter sends communication to IHD or Cust EMS or MDMS and NMS and/or CIS/Billing - Utility of issue with adhoc meter read request relating to metrology. Even though Meter is not a electric grid critical infrastructure component, this payload may be used in performing meter and telecomm network diagnostics.	13, 15, 18, 20	L-L-L	None to minimal harm to customer or organization for access to/disclosure of payload data	A false negative or false positive payload attributes associated to a specific meter may lead to an unnecessary health check of the meter and the associated application	Not receiving this payload to the command may lead to multiple repeated attempts to request the on-demand meter read, which may lead to a specific customers frustration and/or complaint filed with jurisdiction, or eventually to organization observing a broken meter read application
on-demand_Mtr-read_resp-data	Meter sends communication of consumption information as requested from a adhoc meter read request to IHD or Cust EMS or MDMS and NMS and/or CIS/Billing - Utility. Even though Meter is not a electric grid critical infrastructure component, this payload may be used in performing meter and telecomm network diagnostics.	13, 15, 18, 20	L-M-L	Minimal harm to customer or organization for access to/disclosure of payload data as the payload data is tagged to a Meter ID not a customer account	Inaccurate payload data associated to a meter may lead to an incorrect data interpretation or next workflow process execution that may lead to a partial rebuild of stored data or a reprocessing (eg re-billing) for that meter, or customer taking incorrect action at the IHD or Custr EMS that if happens in scale may lead to sever impact to customers or the organization	Not receiving the response payload to the command would create missing data for a meter and may trigger an immediate retry, which if fails again may lead to customer frustration and/or complaint filed with jurisdiction

Payload Name	Description	CSWG LICs	C-I-A	Confidentiality	Integrity	Availability
prepay_cust_enroll_cmd	Customer sends command (via browser) notifying Service Provider (after customer authentication to secure web portal) of Customer's request to enroll in prepay program.	16	H-M-L	Severe to catastrophic harm to customer or organization (in scale) for access to/disclosure of payload data, probably leads to complaint filed with jurisdiction	Inaccurate command parameters associated to an account or a batch of accounts may lead to an incorrect next workflow process execution that may lead to a partial rebuild of stored data or a reprocessing (eg un-enrollment/re-enrollment) for specific or batches of accounts leading to severe harm to customers or organization, with likely complaints filed with jurisdiction	Not receiving the response payload to this command would create missing data for a specific or batch of accounts and would trigger a retry by customer may lead to customer frustration and complaint filed with jurisdiction, minor harm to organization
prepay_cust_unenroll_cmd	Customer sends command (via browser) notifying Service Provider (after customer authentication to secure web portal) of Customer's request to unenroll from prepay program.	16	H-M-L	Severe to catastrophic harm to customer or organization (in scale) for access to/disclosure of payload data, probably leads to complaint filed with jurisdiction	Inaccurate command parameters associated to an account or a batch of accounts may lead to an incorrect next workflow process execution that may lead to a partial rebuild of stored data or a reprocessing (eg re-enrollment/un-enrollment) for specific or batches of accounts leading to severe harm to customers or organization, with likely complaints filed with jurisdiction	Not receiving the response payload to this command would create missing data for a specific or batch of accounts and would trigger a retry by customer may lead to customer frustration and complaint filed with jurisdiction, minor harm to organization
prepay_meter_config_cmd	CIS/Billing - Utility sends command configuring meter to accept customer participation in prepay. This is a grid op task not a maint task. A meter is not an electric grid critical infrastructure component	13, 20	L-H-L	Minimum to severe harm to customer or organization (in scale) for access to/disclosure of payload data, may lead to complaint filed with jurisdiction	Inaccurate command parameters associated to one or a batch of prepay meters may lead to an incorrect next workflow process execution that may lead to a reprogramming/reconfig of meter(s), that may lead to serious harm to customers or severe harm to organization (if-in-scale), with likely complaints filed with jurisdiction	Not receiving the response payload to this command would create missing data for a specific or batch of prepay meters, creating meters unable to function as prepay meters, and may trigger a retry of meter reconfig it not detected, may lead to customer frustration and complaint filed with jurisdiction if customer service /billing impacted, minor harm to organization

Payload Name	Description	CSWG LICs	C-I-A	Confidentiality	Integrity	Availability
prepay_msg_[1of10]_resp-data	CIS/Billing - Utility sends notifications (e.g. any one of ~10 different messages specific to prepay account balance, usage, and other account/payment information) to customer IHD, Cust EMS	13, 15	M-H-M	Minor to severe harm to organization for access to/disclosure of payload data (not demonstration ability to restrict access to data, minor harm to customer as the payload data is associated to a HAN device identifier not to an account IT or customer name	Inaccurate data (specific to more than one account), may lead to an incorrect next workflow process execution (by Service Provider or Customer), that may lead to inappropriate service disconnect, Customer premature payments,and lost of Customer trust and increased frustration with Utility, and/or complaint filed with jurisdiction, a sever to catastrphic (if life threatening) harm to customer and service provider when in-scale	Not receiving this payload would create stale data for a specific or batch of prepay meters and may trigger an immediate retry or retry at next file transfer period and not providing customer with adequate time to take appropriate prepay program action, may lead to severe harm to customer if service disconnect message is missed
SW_opr_cancel_cmd	CIS/Billing - Utility sends communication to Meter cancelling the issuance of a previously issued switch open or close command. This is a grid op task not a maint task. A meter is not an electric grid critical infrastructure component. HAN networks are not used	13/14	M-H-M	Minimal harm to individual customer, rising to serious impact (if in scale) to organization for access to/disclosure of payload data as the payload data is tagged to a Meter ID not a customer account	Inaccurate command parameters associated to a meter would lead to incorrect service switch operation, and potential serious (especially if on life support) harm to customer or potentially severe harm to customer and/or Utility (if in-scale), leading to customer frustration and likely complaint filed with jurisdiction	Not receiving this payload (and the follow-on acknowledgement) may trigger an immediate retry, which if fails again may lead to a field visit after potential serious harm to customer, leading to customer frustration and likely complaint filed with jurisdiction
SW_opr_cmd	CIS/Billing - Utility sends communication to Meter issuing a service switch open or close command. This is a grid op task not a maint task. A meter is not an electric grid critical infrastructure component. HAN networks are not used	13/14	M-H-M	Minimal harm to individual customer, rising to serious impact (if in scale) to organization for access to/disclosure of payload data as the payload data is tagged to a Meter ID not a customer account	Inaccurate command parameters associated to a meter would lead to incorrect service switch operation, and potential serious (especially if on life support) harm to customer or potentially severe harm to customer and/or Utility (if in-scale), leading to customer frustration and likely complaint filed with jurisdiction	Not receiving this payload (and the follow-on acknowledgement) may trigger an immediate retry, which if fails again may lead to a field visit after potential serious harm to customer, leading to customer frustration and likely complaint filed with jurisdiction
SW_opr_cmd_ack	Meter sends to CIS/Billing - Utility & MDMS actors of service switch command receipt/operate acknowledgment. This is a grid op task not a maint task. A meter is not an electric grid critical infrastructure component. HAN networks are not used	13/14	L-L-L	Minimal harm to customer or organization for access to/disclosure of payload data as the payload data is tagged to a Meter ID not a customer account	Inaccurate command parameters associated to a meter might lead to incorrect next work flow task execution, or a extra meter service switch state inquiry, with minimal harm to customer or organization	Not receiving the response payload to the command may create missing dependency for a workflow next step execution, and may trigger an immediate retry, which if fails again may lead to further meter health checks, with minimal harm to customer or organization

Payload Name	Description	CSWG LICs	C-I-A	Confidentiality	Integrity	Availability
SW_opr_cmd_comm-err	DAP or AMI Head-End sends to CIS/Billing - Utility, MDMS, NMS service switch operate communication failure notification. Even though Meter is not a electric grid critical infrastructure component, this payload may be used in performing meter and telecomm network diagnostics. HAN networks are not used.	13, 20	L-L-L	Minimal harm to customer or organization for access to/disclosure of payload data as the payload data is tagged to a Meter ID not a customer account	A false negative or false positive payload attributes associated to a specific meter may lead to an unnecessary health check of the meter and the telecomm network to the meter	Not receiving this payload to the command may lead to multiple repeated attempts to request the service switch operation, which may lead to a specific customers frustration and/or complaint filed with jurisdiction
SW_opr_fail_cmd-err	Meter sends service switch operate failure notification to CIS/Billing - Utility & MDMS. Even though Meter is not a electric grid critical infrastructure component, this payload may be used in performing meter and telecomm network diagnostics. HAN networks are not used.	13, 20	L-M-L	Minimal harm to customer or organization for access to/disclosure of payload data as the payload data is tagged to a Meter ID not a customer account	A false negative or false positive payload attributes associated to a specific meter may lead to an unnecessary health check of the meter and the associated application	Not receiving this payload to the command may lead to multiple repeated attempts to request the service switch operation, which may lead to a meter in an abnormal operating state that may lead to damage to the meter, which may lead to customer frustration and/or complaint filed with jurisdiction
SW_post-oper-info_resp-data	Meter sends service switch post operation metrology data to CIS/Billing - Utility & MDMS. This is a grid op task not a maint task. A meter is not an electric grid critical infrastructure component. HAN networks are not used	13/14	L-L-L	Minimal harm to customer or organization for access to/disclosure of payload data as the payload data is tagged to a Meter ID not a customer account	Inaccurate payload data associated to a meter may lead to an incorrect data interpretation or next workflow process execution that may lead to a partial rebuild of stored data or a reprocessing (eg re-billing) for that meter	Not receiving the response payload to the command would create missing data for a meter and may trigger an immediate retry, which if fails again may lead to organization performing unnecessary meter health checks
SW_state_cmd	CIS/Billing - Utility sends to Meter command requesting current state of service switch. This is a grid op task not a maint task. A meter is not an electric grid critical infrastructure component. HAN networks are not used	13/14	L-L-L	Minimal harm to customer or organization for access to/disclosure of payload data as the payload data is tagged to a Meter ID not a customer account	Inaccurate command parameters associated to a meter may lead to an incorrect data interpretation or next workflow process execution that may lead to a partial rebuild of stored data or a reprocessing for that meter	Not receiving the response payload to the command would create missing data for a meter and may trigger an immediate retry, which if fails again may lead to unnecessary meter health checks
SW_state_cmd_resp-data	Meter sends response to CIS/Billing - Utility, MDMS, or LMS or DSM the meter service switch state command request. This is a grid op task not a maint task. A meter is not an electric grid critical infrastructure component. HAN networks are not used	13/14	L-L-L	Minimal harm to customer or organization for access to/disclosure of payload data as the payload data is tagged to a Meter ID not a customer account	Inaccurate payload data associated to a meter may lead to an incorrect data interpretation or next workflow process execution that may lead to a partial rebuild of stored data or a reprocessing (eg re-billing) for that meter	Not receiving the response payload to the command would create missing data for a meter and may trigger an immediate retry, which if fails again may lead to may lead to unnecessary meter health checks

Payload Name	Description	CSWG LICs	C-I-A	Confidentiality	Integrity	Availability
valve_opr_cancel_cmd	CIS/Billing Utiltiy sends a valve open or close cancel command to 2-Way gas meter	na	M-H-M	Minimal harm to individual customer, rising to serious impact (if in scale) to organization for access to/disclosure of payload data as the payload data is tagged to a Meter ID not a customer account	Inaccurate command parameters associated to a meter would lead to incorrect service valve operation, and potential catastrophic if in scale(eg Gas leak) harm to customer or potentially severe harm to customer and/or Utility (if in-scale)	Not receiving this payload (and the follow-on acknowledgement) may trigger an immediate retry, which if fails again may lead to a field visit after potential serious harm to customer, leading to customer frustration and likely complaint filed with jurisdiction
valve_opr_cmd	CIS/Billing Utiltiy sends a valve open or close command to 2-Way gas meter	na	M-H-M	Minimal harm to customer or organization for access to/disclosure of payload data as the payload data is tagged to a Meter ID not a customer account	Inaccurate command parameters associated to a meter would lead to incorrect service valve operation, and potential serious (eg Gas leak) harm to customer or potentially severe harm to customer and/or Utility (if in-scale)	Not receiving this payload (and the follow-on acknowledgement) may trigger an immediate retry, which if fails again may lead to a field visit after potential serious harm to customer, leading to customer frustration and likely complaint filed with jurisdiction
valve_opr_cmd_ack	2-Way Meter - Gas sends message to CIS/Billing Utility, acknowledging receipt and processing of the valve operate command	na	L-L-L	Minimal harm to customer or organization for access to/disclosure of payload data as the payload data is tagged to a Meter ID not a customer account	Inaccurate command acknowledgements would cause the utility to not understand whether a valve was operated correctly	Not receiving the response payload to the command would cause the utility to not understand the state of the valve and would cause the utility to visit the premises in person
valve_opr_cmd_comm-err	DAP sends message to Utility back-office systems, of failure to communicate with the 2-Way Meter - Gas	na	L-L-L	Minimal harm to customer or organization for access to/disclosure of payload data as the payload data is tagged to a Meter ID not a customer account	Inaccurate command acknowledgements would cause the utility to not understand whether a valve was operated correctly	Not receiving the communication error payload to the command would cause the utility to not understand the state of the valve and would cause the utility to visit the premises in person
valve_opr_fail_cmd-err	2-Way Meter - Gas sends message to Utility back-office systems, of failure to perform/complete the valve operate command	na	L-M-L	Minimal harm to customer or organization for access to/disclosure of payload data as the payload data is tagged to a Meter ID not a customer account	Inaccurate command parameters associated to a meter would lead to incorrect service valve operation, and potential serious (eg Gas leak) harm to customer or potentially severe harm to customer and/or Utility (if in-scale)	Not receiving this message may cause a utility to not understand business value of reducing visits to a customers premises
valve_post-oper-info_resp-data	2-Way Gas meter sends message to Utility back-office systems, of the state of the 2-Way Meter - Gas	na	L-L-L	Minimal harm to customer or organization for access to/disclosure of payload data as the payload data is tagged to a Meter ID not a customer account	Inaccurate valve state payloads would cause the utility to not understand whether a valve was operated correctly	Not receiving the response payload to the command would cause the utility to not understand the state of the valve and would cause the utility to visit the premises in person

Payload Name	Description	CSWG LICs	C-I-A	Confidentiality	Integrity	Availability
valve_state_cmd	CIS/Billing Utiltiy sends a get valve state command to 2-Way gas meter	na	L-L-L	Minimal harm to customer or organization for access to/disclosure of payload data as the payload data is tagged to a Meter ID not a customer account	Inaccurate valve state payloads would cause the utility to not understand whether a valve was operated correctly	Not receiving the response payload to the command would cause the utility to not understand the state of the valve and would cause the utility to visit the premises in person
valve_state_cmd_resp-data	2-Way Meter - Gas sends message to Utility back-office systems, of the position of the valve	na	L-L-L	Minimal harm to customer or organization for access to/disclosure of payload data as the payload data is tagged to a Meter ID not a customer account	Inaccurate valve state payloads would cause the utility to not understand whether a valve was operated correctly	Not receiving the response payload to the command would cause the utility to not understand the state of the valve and would cause the utility to visit the premises in person

5.7.4 Scenarios

5.7.4.1 Customer Enrolls in a Prepayment program

Narrative

Electric meters may be enrolled in prepayment programs through the use of customer requests to the CIS infrastructure. There are several sources of the enroll request that can be collapsed into two basic types, one from browsers at the customer premise and one from the customer mobile browser. In this scenario, the prepay_cust_enroll_cmd is sent from a customer's mobile phone or personal computer to the CIS Billing (Utility or REP) system.

NOTE: The latency requirement is less for mobile browsers (< 30 seconds) versus browsers on a personal computer.

Business Objectives

Payload Name	Payload Type	Payload Attributes	PAP02 Baseload (routine)	PAP02 Highload (full load)	Originating Actor	Destination Actor	Reliability	Latency	When	How Often	Payload Size
prepay_cust_enroll_cmd	cmd	customer's Account ID, cust-program code	X	X	Cust. Browser - Premise,Cust. Browser - Mobile	CIS/Billing - Utility,CIS/Billing - REPi	> 99%	< 15 sec,< 30 sec	7AM - 10PM	1 per | CustPremiseBrowser per | Utl PrePay Mtr enrollment,1 per | CustPremiseBrowser per | REPi PrePay Mtr enrollment,1 per | CustMobileBrowser per | Utl PrePay Mtr enrollment,1 per | CustMobileBrowser per | REPi PrePay	100

Payload Name	Payload Type	Payload Attributes	PAP02 Baseload (routine)	PAP02 Highload (full load)	Originating Actor	Destination Actor	Reliability	Latency	When	How Often	Payload Size
										Mtr enrollment	

5.7.4.2 Customer Un-Enrolls out of a Prepayment program

Narrative

Electric meters may be un-enrolled in prepayment programs through the use of customer requests to the CIS infrastructure. There are several sources of the un-enroll request that can be collapsed into two basic types, one from browsers at the customer premise and one from the customer mobile browser. In this scenario, the prepay_cust_unenroll_cmd is sent from a customer's mobile phone or personal computer to the CIS Billing (Utility or REP) system.

NOTE: The latency requirement is less for mobile browsers (< 30 seconds) versus browsers on a personal computer.

Business Objectives

Payload Name	Payload Type	Payload Attributes	PAP02 Baseload (routine)	PAP02 Highload (full load)	Originating Actor	Destination Actor	Reliability	Latency	When	How Often	Payload Size
prepay_cust_unenroll_cmd	cmd	customer's Account ID, cust-program code	X	X	Cust. Browser - Premise,Cust. Browser - Mobile	CIS/Billing - Utility,CIS/Billing - REPi	> 99%	< 15 sec,< 30 sec	7AM - 10PM	1 per | CustPremiseBrowser per | Utl PrePay Mtr unenroll request,1 per | CustPremiseBrowser per | REPi PrePay Mtr unenroll request,1 per | CustMobileBrowser per | Utl PrePay Mtr unenroll request,1 per | CustMobileBrowser per | REPi PrePay Mtr unenroll request	100

5.7.4.3 Meter Gets Prepayment configuration

Narrative

When a customer enrolls in a Prepayment program, the meter needs to be configured differently for billing details specific to the selected Prepayment program. When this event occurs, the prepay_meter_config_cmd is sent to the 2-Way Meter – Electr from the CIS Billing System.

NOTE: If a customer un-enrolls from a Prepayment program, we assume the

Business Objectives

Payload Name	Payload Type	Payload Attributes	PAP02 Baseload (routine)	PAP02 Highload (full load)	Originating Actor	Destination Actor	Reliability	Latency	When	How Often	Payload Size
prepay_meter_config_cmd	cmd	Meter ID, command code, config-parms	X	X	CIS/Billing - Utility	2-Way Meter - Electr	> 98%	< 1 min	7AM - 10PM	1 per | PrePay-joined-ElectrMtr per | Utl PrePay enrollment	25

5.7.4.4 On-Demand Meter Read

See Section Scenario: On-Demand Meter Reading for information on this scenario.

5.7.4.5 On-Demand Meter Read Errors

See Section Scenario: On-Demand Read Failure for information on this scenario.

5.7.4.6 Prepayment Program Messaging to Customer

Narrative

The CIS actors may need to send messages to Prepayment program customers from time to time to inform customers on items like price, available credit, or general broadcast messages. The CIS actor can send messages to different actors which are the IPD, the Customer EMS. The communication characteristics can be collapsed for simplification with the prepay_msg_[1of10]_resp-data payload.

Business Objectives

Payload Name	Payload Type	Payload Attributes	PAP02 Baseload (routine)	PAP02 Highload (full load)	Originating Actor	Destination Actor	Reliability	Latency	When	How Often	Payload Size
prepay_msg_[1of10]_resp-data	resp-data	HAN device (IHD, Cust EMS) ID, command code, display variable data (e.g. kwh, prepay $/kwh balance, estimate time to 0 balance, avg usage per period, payment amounts)	X	X	CIS/Billing - Utility,CIS/Billing - REPi	IPD,Cust. EMS	> 98%	< 30 sec	7AM - 10PM	25 per | Utl-PrePay-Mtr-with-IPD per | month,25 per | Utl-PrePay-Mtr-with-CustEMS per | month,25 per | REPi-PrePay-Mtr-with-IPD per | month,25 per | REPi-PrePay-Mtr-with-CustEMS per | month	50 - 150

5.7.4.7 Customer Payments

Narrative

Customers must make payments in order to continue to receive electric service. Non-payment will ultimately result in a meter disconnection of service. Payment and credit activities are out of scope from this document. Customer account levels and the display of that information on the IPD are in scope.

5.7.4.8 Service Switch Operation

Narrative

Service Switch Operations are used within these use cases for the purpose of shutting off electric service to those Prepayment program customers who have not paid for service and have run out of funds in their accounts. The process for determining account funding is out of scope for this document. Please see the Utility Service Switch/Valve Operation section for more information.

5.8 Electric Transportation

5.8.1 Overview

The use case of Electric Transportation was considered to show telecommunications requirements for transactions that occur while charging electric vehicles. The following scenarios are considered in this use case.

1) Negotiation of Price
2) Negotiation of Charging rate (e.g. Level 1, Level 2, etc)
3) Electric Vehicle sends VIN to Energy Supply agent

5.8.1.1 Reference Architecture with Domains, Actors and Interfaces

Smart Grid Conceptual Actors / Data Flow Diagram – Cross Domain Network Focused – OpenSG / SG-Network TF

PHEV Use Case

DRAFT 14Feb2012
Base – file SG-NET-diagram-r5.1.vsd
page size: ANSI-D

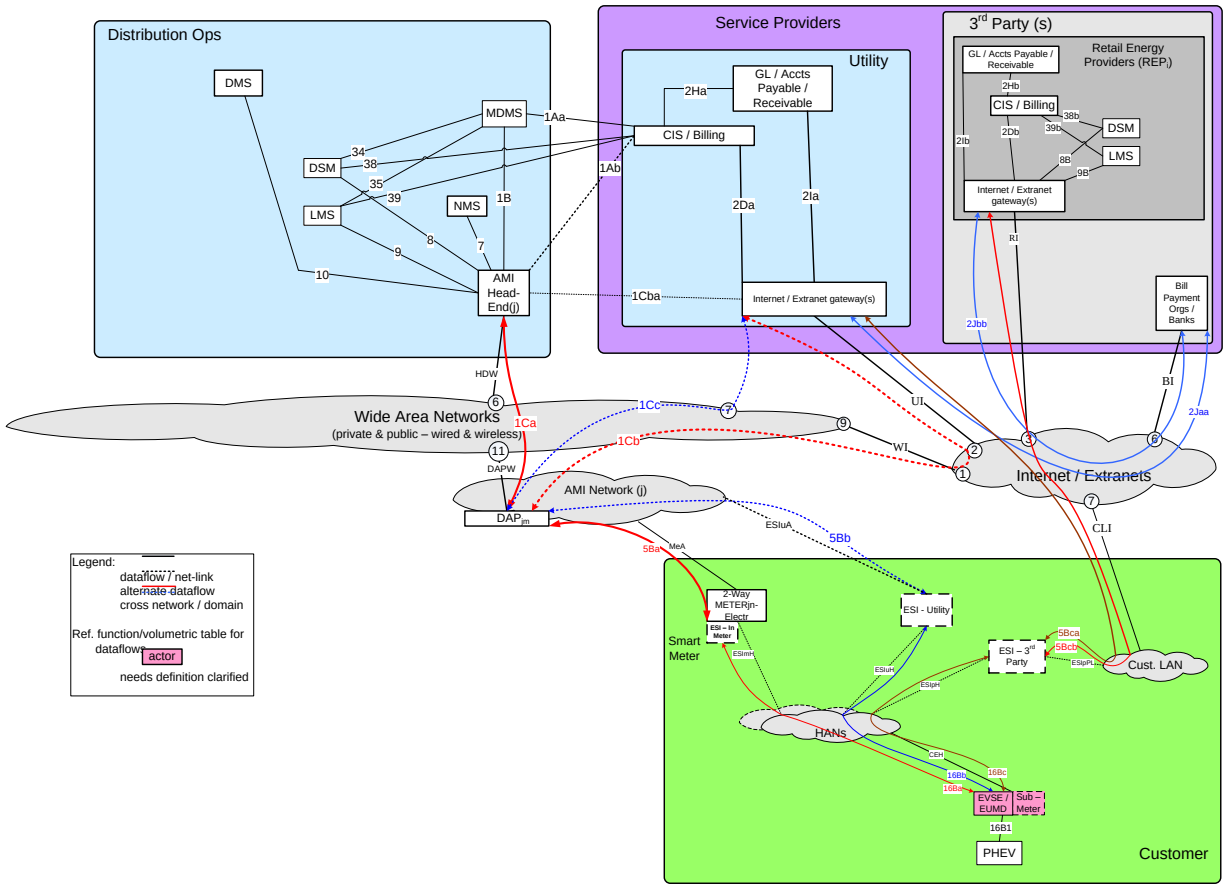

5.8.1.2 Possible communication paths

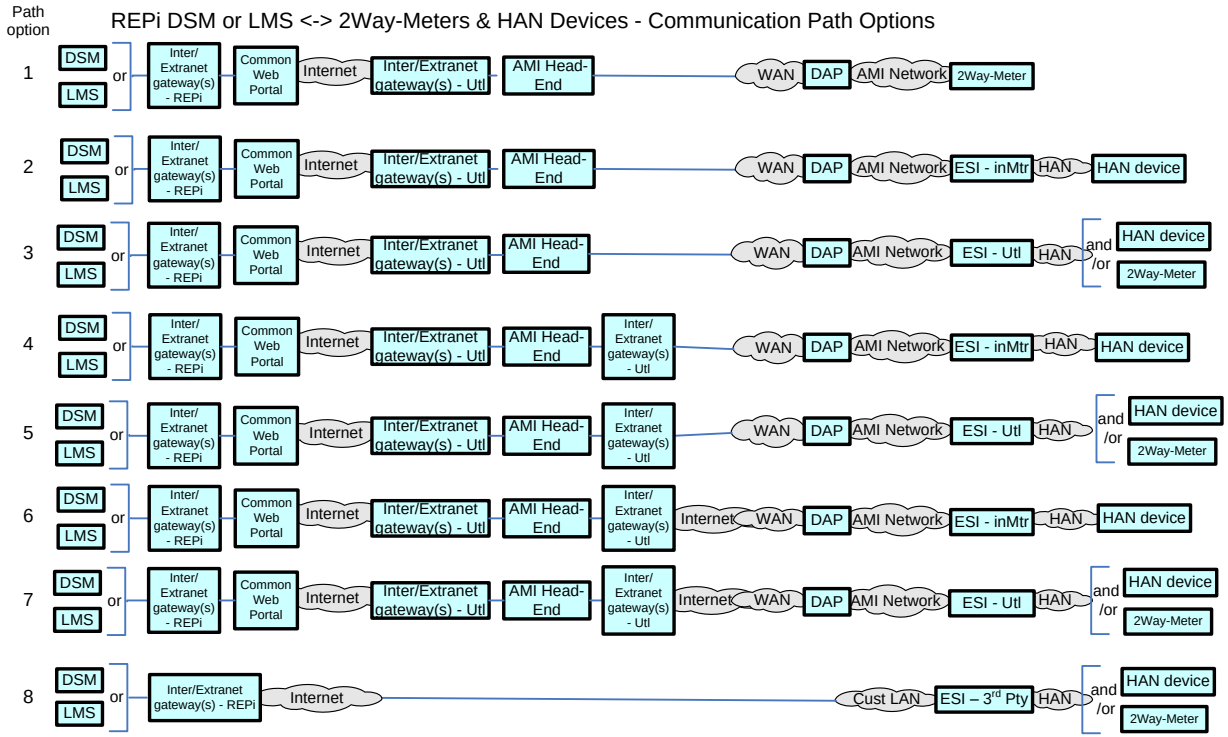

Note: HAN device in this figure is refers to Plugin Hybrid Electric Vehicle and/or Electric Vehicle Supply Equipment

5.8.2 Actors

Actor	Description
2-Way Meter – Electr	A bi-directional communication device used to perform measurement of electrical energy usage for residential use.
AMI Head-End(j)	The AMI head end is responsible for the operation and coordination of AMI system components. It represents the central nervous system of the AMI system.
Common Web Portal	Web interface for Regional Transmission Operator, customers, retail electric providers and transmission/distribution service provider to function as a clearing house for energy information.
DAPjm	This is the Data Aggregation Point on the NAN. It is essentially the point of convergence for all communication between SG devices and utility back office systems. In this specific use case it provides a communication conduit for AMI Smart Meters.
DSM – REPi	Demand Side Management - Retail Energy Provider; A system that co-ordinates demand response / load shedding messages indirectly to devices (e.g. Set point adjustment)
DSM – Utility	Demand Side Management - Utility; A system that co-ordinates demand response / load shedding messages indirectly to devices (e.g. Set point adjustment)
ESI - 3rd Party	An ESI, owned by the Customer and not provided by the Utility, which enables secure interactions between HAN Devices Registered on its network and the service provider e.g. REP. The 3rd Party ESI functionality may reside in the Customer EMS or customer's
ESI - In Meter	An ESI, owned by the Utility and resides in the Utility meter, which enables secure interactions between HAN Devices Registered on its network and the Utility AMI.
ESI – Utility	An ESI, owned by the Utility, which enables secure interactions between HAN Devices Registered on its network and the Utility AMI. The Utility ESI functionality may reside in the Customer EMS or customer broadband router.
EVSE / EUMD	Electric Vehicle Supply Equipment / End Use Metering Device
Internet / Extranet gateway(s) - REPi	These are gateways used to connect internal utility networks with external networks.
Internet / Extranet gateway(s) - Utility	These are gateways used to connect internal utility networks with external networks.
LMS – REPi	Load management system
LMS – Utility	Load management system - System that controls load by sending messages directly to device (e.g. On/Off)

Actor	Description
PHEV	Plug-in Hybrid Electric Vehicles - Cars or other vehicles that draw electricity from batteries to power an electric motor for vehicle propulsion. PHEVs also contain an internal combustion engine.

5.8.3 Applicable Payload Information

Payload Name	Description	CSWG LICs	C-I-A	Confidentiality	Integrity	Availability
PHEV_price_rate_cmd	Operations e.g. LMS actor sends communication to PHEV notifying customer of PHEV price tier.	13, 15, 18	L-L-L	None to minimal harm to customer or organization for access to/disclosure of payload data eg the PHEV base charging price rates are either published tariffs or those posted at public charging stations	Inaccurate command parameters associated to a meter may lead to an incorrect data interpretation or next workflow process execution that may lead to a partial rebuild of stored data or a reprocessing (eg re-billing) for the PHEV charge, which may lead to customer frustration and/or complaint filed with jurisdiction	Not receiving the payload will create missing data for a PHEV charge and may trigger an immediate retry, which if fails again may lead to customer frustration and/or complaint filed with jurisdiction
PHEV_price_rate_comm_err	ESI sends communication to Operations e.g. LMS of issue with sending PHEV price tier to PHEV.	13, 15, 18	L-L-L	None to minimal harm to customer or organization for access to/disclosure of payload data	A false negative or false positive payload attributes associated to a specific EVSE/EUMD or Sub-Meter may lead to an unnecessary health check of the EVSE/EUMD or Sub-Meter and the telecomm network to the EVSE/EUMD or Sub-Meter	Not receiving this payload may lead to multiple repeated attempts to request the PHEV price rates, which may lead to a specific customers frustration and/or filed complaint with jurisdiction
PHEV_pwr_chrg_rate_comm_err	AMI Head-End sends communication to PHEV, Operations e.g. LMS, NMS of issue with communication of PHEV power charging rate negotiation to PHEV.	13, 15, 18	L-L-L	None to minimal harm to customer or organization for access to/disclosure of payload data	A false negative or false positive payload attributes associated to a specific EVSE/EUMD or Sub-Meter may lead to an unnecessary health check of the EVSE/EUMD or Sub-Meter and the telecomm network to the EVSE/EUMD or Sub-Meter	Not receiving this payload may lead to multiple repeated attempts to request the PHEV power charging rates, which may lead to a specific customers frustration and/or filed complaint with jurisdiction
PHEV_pwr_chrg_rate_negot-thrd	LMS & PHEV exchanging negotiation messages of 'Notification of relative power charging rate levels and associated price rate tiers with any avaialble DR or TOU pricing riders for PHEV.	13, 15, 18	L-M-L	None to minimal harm to customer or organization for access to/disclosure of payload data, if any non-public DR or TOU riders then this would be a minor harm and might rise to serious harm to organization especially if in-scale	Inaccurate payload attributes associated to a specific PHEV may lead to an unnecessary health check of the EVSE/EUMD or Sub-Meter and may lead to inaccurate PHEV charge billing or may lead to serious effect on safe reliable operation of associated meter's circuit especially if in-scale	Not receiving this payload may lead to multiple repeated attempts to select (negotiate) the customer preferred power charging rate, which may lead to a specific customers frustration and/or filed complaint with jurisdiction

Payload Name	Description	CSWG LICs	C-I-A	Confidentiality	Integrity	Availability
PHEV_pwr_chrg_status_resp-data	PHEV sends response to Operations e.g. LMS actor of charge status request	13, 15, 18	L-L-L	None to minimal harm to customer or organization for access to/disclosure of payload data	Inaccurate payload attributes associated to a PHEV may lead to an incorrect data interpretation or next workflow process execution	Not receiving the response payload to the command would create missing data for a meter and may trigger an immediate retry, which if fails again may lead to customer frustration and/or complaint filed with jurisdiction
PHEV_Vin_data_cmd	PHEV sends communication to Operations e.g. MDMS actor of specific PHEV identification	13, 15, 18	L-M-L	None to minimal harm to customer or organization for access to/disclosure of payload data as other customer account data is not in this payload	Inaccurate command parameters associated to a meter may lead to an incorrect data interpretation or next workflow process execution	Not receiving the response payload to the command would create missing data for a PHEV charging attempt and may trigger an immediate retry, which if fails again may lead to customer frustration and/or complaint filed with jurisdiction
PHEV_Vin_data_comm_err	AMI Head-End sends communication to PHEV of error in sending PHEV identification to MDMS.	13, 15, 18	L-L-L	None to minimal harm to customer or organization for access to/disclosure of payload data	A false negative or false positive payload attributes associated to a specific PHEV may lead to an unnecessary health check of the PHEV or EVSE/EUMD and the telecomm network to the PHEV or EVSE/EUMD	Not receiving this payload may lead to multiple repeated attempts to request the PHEV Vin data, which may lead to a specific customers frustration and/or filed complaint with jurisdiction

5.8.4 Scenarios

5.8.4.1 Scenario: Energy Supplier sends price information to PHEV

Narrative

In this scenario, the Energy Supplier (e.g. LMS-Utility) sends price information PHEV_price_rate_cmd payload to the PHEV in order for the PHEV operator to understand the current price of energy. The actors between the Energy Supplier and the PHEV are required to send the PHEV_price_rate_comm_err at the last known point of failure when sending the PHEV_price_rate_cmd.

Business Objectives

Payload Name	Payload Type	Payload Attributes	PAP02 Baseload (routine)	PAP02 Highload (full load)	Originating Actor	Destination Actor	Reliability	Latency	When	How Often	Payload Size
PHEV_price_rate_cmd	cmd	device ID, price information	X	X	LMS - Utility	PHEV	> 98%	< 15 sec	7AM - 10PM	1 per | connected-PHEV per | 2-4 per day	255
PHEV_price_rate_comm_err	comm-err	device ID, failure code	X	X	ESI - Utility,ESI - In Meter,ESI - 3rd Party	LMS - Utility, NMS, DMS, DSM - Utility	> 98%,> 99%	< 15 sec	7AM - 10PM	1 per 1000 per | ESIUtl-PHEV per | day,1 per 1000 per | PHEV-ESIInMtr per | day,1 per 1000 per | ESI3rdPty-PHEV-ESIInMtr per | day	50

5.8.4.2 Scenario: Energy Supplier interrogates the charge status of a PHEV

Narrative

In this scenario, the Energy Supplier sends the PHEV_pwr_chg_rate_negot-thrd payload interrogating the PHEV about the battery charge. The PHEV shall respond with the PHEV_pwr_chrg_status_resp-data payload. The actors between the Energy Supplier and the PHEV are required to send the PHEV_pwr_chrg_rate_comm_err at the last known point of failure when sending the PHEV_pwr_chg_rate_negot-thrd.

The PHEV_pwr_chrg_rate_negot-thrd payload is unique when compared to other payloads as it is bi-directionally sent during charging rate(level 1, level 2, etc) negotiations.

Business Objectives

Payload Name	Payload Type	Payload Attributes	PAP02 Baseload (routine)	PAP02 Highload (full load)	Originating Actor	Destination Actor	Reliability	Latency	When	How Often	Payload Size
PHEV_pwr_chrg_rate_comm_err	comm-err	device ID, failure code	X	X	AMI Head-End(j)	PHEV, NMS,LMS - Utility, NMS	> 98%,> 99%	< 15 sec,< 10 sec	7AM - 10PM	1 per 1000 per | PHEV per | day	50
PHEV_pwr_chrg_rate_negot-thrd	negot-thrd	device ID, price rate tier, power charge rate level, DR or TOU rider rates	X	X	LMS - Utility,PHEV	PHEV,LMS - Utility	> 98%	< 15 sec	7AM - 10PM	2-4 per | connected-PHEV per | day	100
PHEV_pwr_chrg_status_resp-data	resp-data	device ID, battery charge status (e.g. 80%, full, etc)	X	X	PHEV	LMS - Utility	> 98%	< 15 sec	7AM - 10PM	2-4 per | PHEV per | charging event per day	100

5.8.4.3 Scenario: PHEV sends VIN information to Energy Supplier

Narrative

In this scenario, the PHEV sends the PHEV_VIN_data_cmd payload to the Energy Supplier. This payload contains information that allows the Energy Supplier enough information to allow for fiscal settlement after a PHEV charges. While VIN (vehicle identification number) is discussed in this scenario, other identification means (e.g. certificate, account id, etc may be substituted). If the PHEV_VIN_Data_cmd payload is not successfully set to the Energy Supplier, the PHEV_Vin_data_comm_err shall be sent to the PHEV.

Business Objectives

Payload Name	Payload Type	Payload Attributes	PAP02 Baseload (routine)	PAP02 Highload (full load)	Originating Actor	Destination Actor	Reliability	Latency	When	How Often	Payload Size
PHEV_Vin_data_cmd	cmd	device ID, VIN, command parameter	X	X	PHEV	MDMS	> 98%	< 15 sec	7AM - 10PM	1 per | connected-PHEV per | day	50
PHEV_Vin_data_comm_err	comm-err	device ID, failure code	X	X	AMI Head-End(j)	PHEV	> 99.5%	< 10 sec	7AM - 10PM	1 per 1000 per | connected-PHEV per | day	50

5.9 Firmware Updates and Program / Configuration Use Cases

5.9.1 Overview

This section covers use cases for updating firmware and making programming/configuration changes for the following devices:

	Scenario		Firmware Update Method		
Actor	Configuration / Programming	Firmware Update	Unicast	Multicast	Broadcast
DAP	Included	Included	x		
2 - way elec mtr metrology	Included	Included	x	x	x
2 - way elec mtr NIC[3]	Included	Included	x	x	x
2 - way elec mtr ESI	Included	Included	x	x	x
FAN-GtWay	Included	Included	x		
Fdr-dev-cntl[4]	Included	Included	x		

[3] Only the Electric meter is covered in this scenario. However this actor could be re-used for gas and water meters.

[4] The Fdr-dev-cntl actor represents a variety of different DA actors that are listed in the Actors section

5.9.1.1 Reference Architecture with Domains, Actors and Interfaces

Smart Grid Conceptual Actors / Data Flow Diagram – Cross Domain Network Focused – OpenSG / SG-Network TF

Firmware / Program Update Use Case

DRAFT 14Feb2012
Base – file SG-NET-diagram-r5.1.vsd
page size: ANSI-D

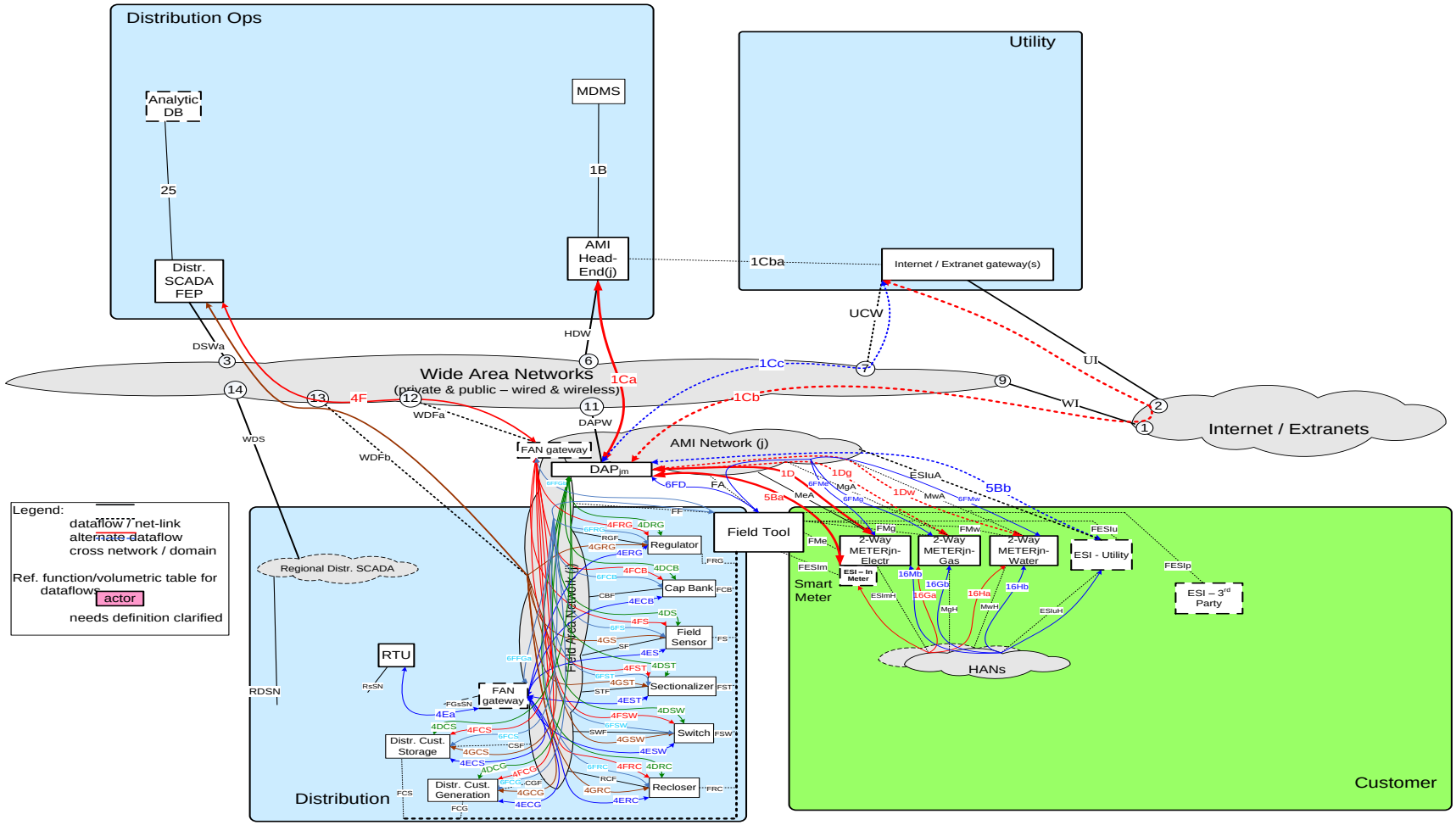

5.9.1.2 Possible communication paths

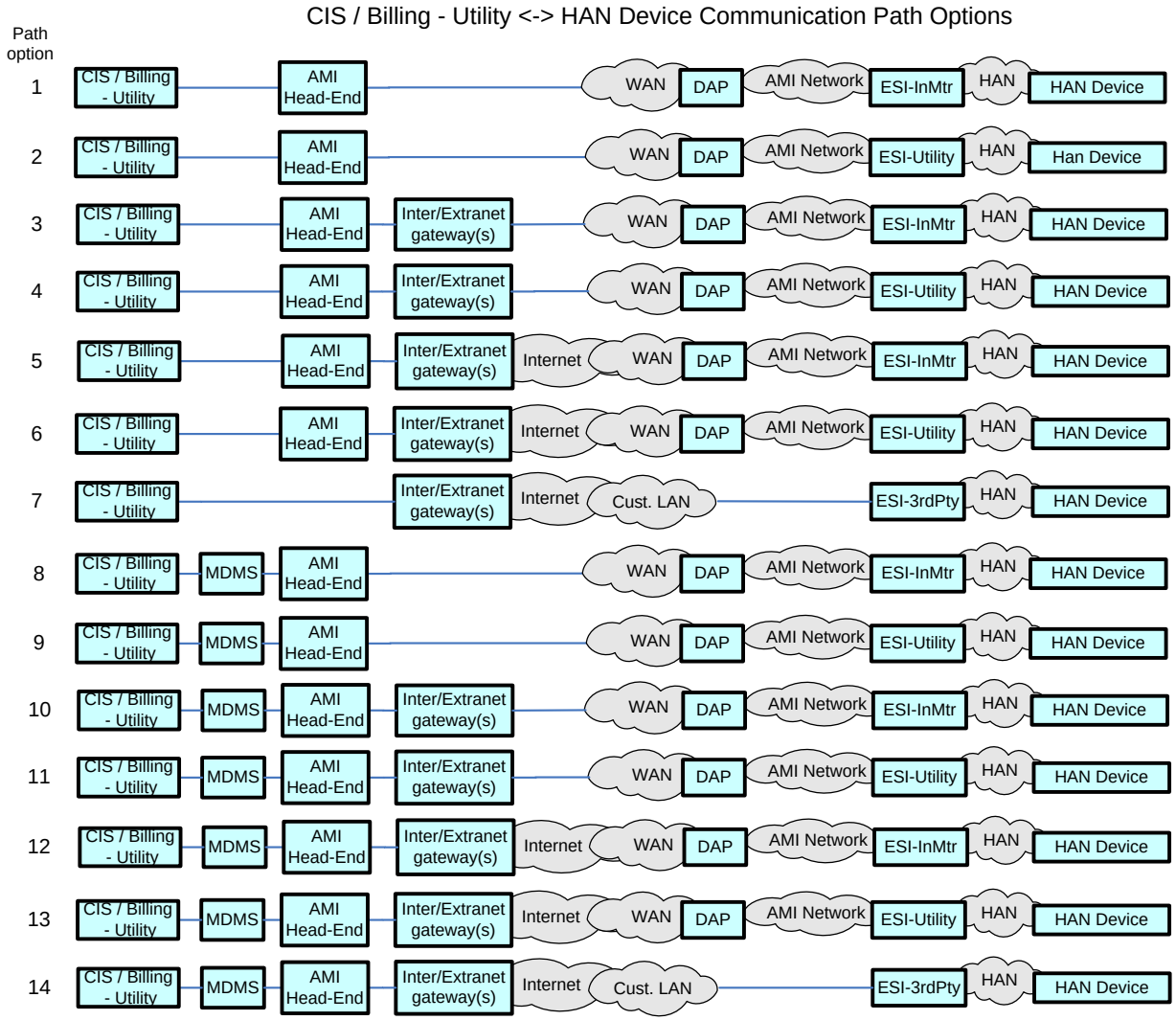

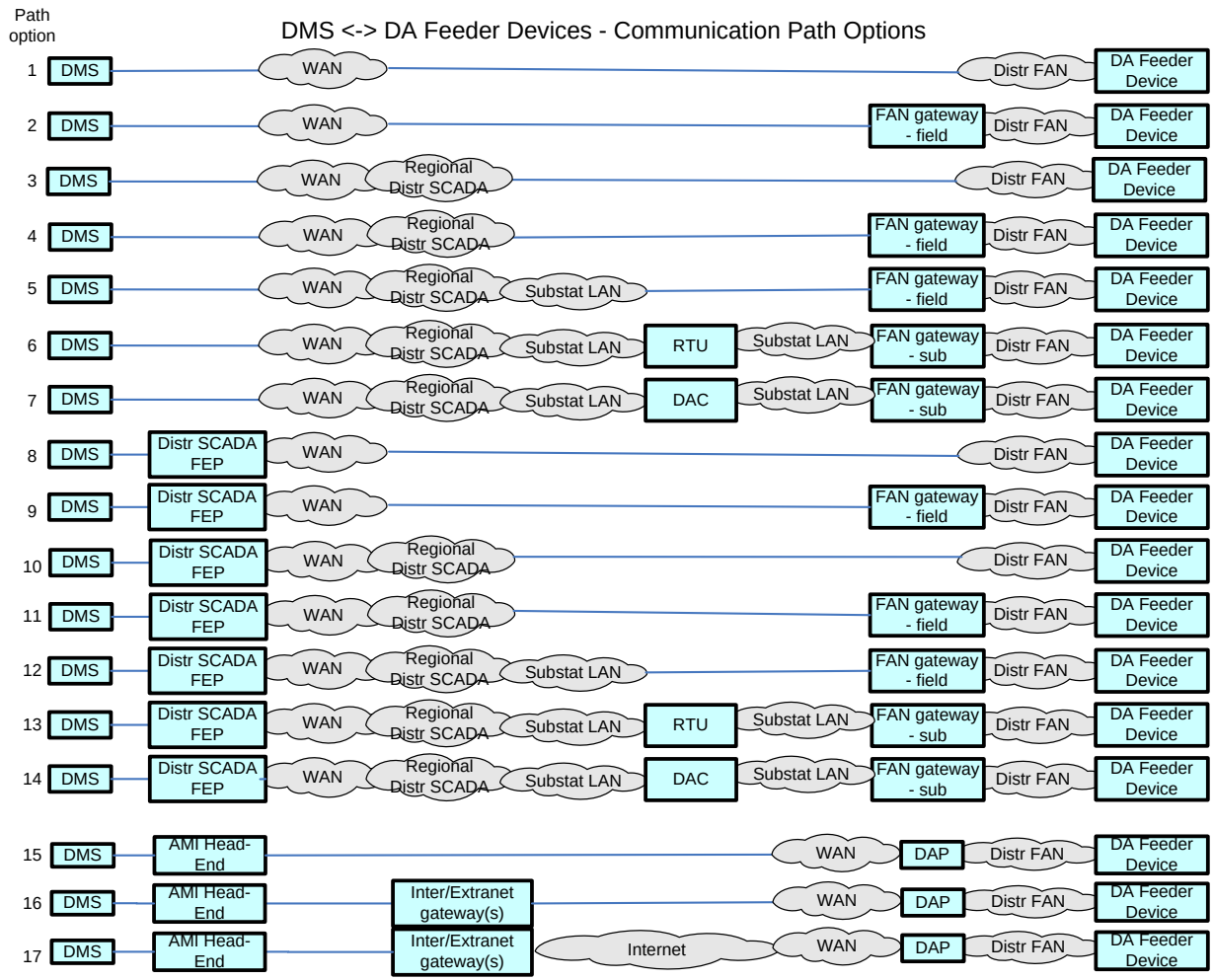
DMS <-> DA Feeder Devices - Communication Path Options
Path option
1 DMS WAN Distr FAN DA Feeder Device
2 DMS WAN FAN gateway - field Distr FAN DA Feeder Device
3 DMS WAN Regional Distr SCADA Distr FAN DA Feeder Device
4 DMS WAN Regional Distr SCADA FAN gateway - field Distr FAN DA Feeder Device
5 DMS WAN Regional Distr SCADA Substat LAN FAN gateway - field Distr FAN DA Feeder Device
6 DMS WAN Regional Distr SCADA Substat LAN RTU Substat LAN FAN gateway - sub Distr FAN DA Feeder Device
7 DMS WAN Regional Distr SCADA Substat LAN DAC Substat LAN FAN gateway - sub Distr FAN DA Feeder Device
8 DMS Distr SCADA FEP WAN Distr FAN DA Feeder Device
9 DMS Distr SCADA FEP WAN FAN gateway - field Distr FAN DA Feeder Device
10 DMS Distr SCADA FEP WAN Regional Distr SCADA Distr FAN DA Feeder Device
11 DMS Distr SCADA FEP WAN Regional Distr SCADA FAN gateway - field Distr FAN DA Feeder Device
12 DMS Distr SCADA FEP WAN Regional Distr SCADA Substat LAN FAN gateway - field Distr FAN DA Feeder Device
13 DMS Distr SCADA FEP WAN Regional Distr SCADA Substat LAN RTU Substat LAN FAN gateway - sub Distr FAN DA Feeder Device
14 DMS Distr SCADA FEP WAN Regional Distr SCADA Substat LAN DAC Substat LAN FAN gateway - sub Distr FAN DA Feeder Device
15 DMS AMI Head-End WAN DAP Distr FAN DA Feeder Device
16 DMS AMI Head-End Inter/Extranet gateway(s) WAN DAP Distr FAN DA Feeder Device
17 DMS AMI Head-End Inter/Extranet gateway(s) Internet WAN DAP Distr FAN DA Feeder Device

5.9.2 Actors

Actor	Description
2-Way Meter - Electr	A bi-directional communication device used to perform measurement of electrical energy usage for residential use.
2-Way Meter - Gas	A bi-directional communication device used to perform measurement of gas consumption for residential use.
2-Way Meter - Water	A bi-directional communication device used to perform measurement of water consumption for residential use.
AMI Head-End(j)	The AMI head end is responsible for the operation and coordination of AMI system components. It represents the central nervous system of the AMI system.
DAPjm	This is the Data Aggregation Point on the NAN. It is essentially the point of convergence for all communication between SG devices and utility back office systems. In this specific use case it provides a communication conduit for AMI Smart Meters.
Distr. Cust. Generation	Distributed Customer Generation is a generation source sized to meet typical distribution substation circuit loads and is typically located at or near a distribution substation
Distr. Cust. Storage	Distributed Customer Storage is a storage device sized to meet typical distribution substation circuit loads and is typically located at or near a distribution substation or in smaller capacities out in customer/premise neighborhoods
Distr. SCADA FEP	Distribution Supervisory Control and Data Acquisition Front End Processor
ESI - 3rd Party	An ESI, owned by the Customer and not provided by the Utility, which enables secure interactions between HAN Devices Registered on its network and the service provider e.g. REP. The 3rd Party ESI functionality may reside in the Customer EMS or customer's
ESI - In Meter	An ESI, owned by the Utility and resides in the Utility meter, which enables secure interactions between HAN Devices Registered on its network and the Utility AMI.
ESI - In Meter, ESI - Utility	A combination of ESI - In Meter and ESI - Utility for determining the exact quantity of payloads to be associated to a DAPjm
ESI - In Meter, ESI - Utility, ESI - 3rd Party	A combination of ESI - In Meter and ESI - Utility and ESI - 3rd Party for determining the exact quantity of payloads to be associated to a DAPjm
ESI – Utility	An ESI, owned by the Utility, which enables secure interactions between HAN Devices Registered on its network and the Utility AMI. The Utility ESI functionality may reside in the Customer EMS or customer broadband router.
FAN gateway – field	Field Area Network gateway device located in the field, that provides the interface between the Feeder Line device communication modules and the Wide Area Network connection.
FAN gateway - field, FAN gateway - sub	A combination of FAN gateway - field and FAN gateway - sub for determining the exact quantify of payloads to the Feeder Line devices
FAN gateway – sub	Field Area Network gateway device located in the substation, that provides the interface between the Feeder Line device communication modules and the Substation network connection.
Feeder Cap Bank	This is a device used to add capacitance as needed at strategic points in a distribution grid to better control and manage VARs and thus the Power Factor and they will also affect voltage levels.
Feeder Recloser	A device used to sense fault conditions on a distribution line and trip open to provide protection. It is typically programmed to automatically close (re-close) after a period of time to test if the fault has cleared. After several attempts of reclosing

Actor	Description
Feeder Regulator	This device is in effect an adjustable ratio transformer positioned at strategic points in a distribution grid and is utilized to better manage and control the voltage as it changes along the distribution feeder.
Feeder Sensor	A device used to measure and report electrical properties (such as voltage, current, phase angle or power factor, etc.) at a low voltage customer delivery point.
Feeder Switch	These devices are deployed at critical points within the Distribution network for purposes of isolating electric faults and providing system telemetry regarding the performance of the electric system
Field Tool	A device used in the distribution operations and customer domain to perform configuration and maintenance of devices.
Internet / Extranet gateway(s) - Utility	These are gateways used to connect internal utility networks with external networks.
MDMS	The application responsible for the collection and retrieval of all relevant customer information for purposes of billing and facilitating interaction.
RTU	Remote Terminal Unit - Aggregator of multiple serialized devices to a common telecommunications interface

5.9.3 Applicable Payloads

Payload Name	Description	CSWG LICs	C-I-A	Confidentiality	Integrity	Availability
DAP_firmware_update_cmd	AMI Head-End or Field Tool sends command to initiate a firmware update on a DAP. DAP is not a electric grid critical infrastructure component except if it the DAP provides telecommunications to distribution equipment. This payload is not used primarily for disturbance analysis.	13/14, 20	L-H-L	None to minimal harm to customer or organization for access to/disclosure of payload data	Serious to severe harm (if used for comm with critical infrastructure or in-scale) if inaccurate Device ID, Firmware could lead to a device loading incorrect firmware, cutover time could lead to a device updating before the system is ready	Failed firmware updates commands are assumed to be retried if failed without consequence
DAP_firmware_update_confirmation	DAP sends confirmation of completion of DAP firmware upgrade to AMI Head-End or Field Tool. DAP is not a electric grid critical infrastructure component except if it the DAP provides telecommunications to distribution equipment. This payload is not used primarily for disturbance analysis.	13/14, 20	L-M-M	None to minimal harm to customer or organization for access to/disclosure of payload data	moderate harm (if in-scale) if inaccurate device ID , success versus fail status and firmware version could lead a utility to believe a system is up to date when incorrect	Moderate harm (if in-scale) if failed firmware updates confirmations are assumed to be retried if failed without consequence however confirmation is expected to be guaranteed
DAP_program_update_cmd	AMI Head-End or Field Tool sends command to initiate a Program/Configuration command to a DAP. DAP is not a electric grid critical infrastructure component except if it the DAP provides telecommunications to distribution equipment. This payload is not used primarily for disturbance analysis.	13/14, 20	M-H-L	Moderate harm to customer and utility if an adversary is able to ascertain the configuration/program command with device ID, firmware version number and cut over information	Serious to severe operational reliable economic harm (if DAP comm to critical infrastructure or in-scale) if inaccurate Device ID, configuration could lead to a device loading incorrect configuration cutover time could lead to a device updating before the system is ready	Failed configuration/program update commands are assumed to be retried if failed without consequence
DAP_program_update_confirmation	DAP sends response that a DAP configuration/program command has been completed to AMI Head-End or Field Tool. DAP is not a electric grid critical infrastructure component except if it the DAP provides telecommunications to distribution equipment. This payload is not used primarily for disturbance analysis.	13/14, 20	L-M-M	None to minimal harm to customer or organization for access to/disclosure of payload data ID, acknowledgement code and cut over information	Moderate harm if inaccurate device ID , success versus fail status and configuration/program version could lead a utility to believe a system is up to date when incorrect	Moderate harm if failed configuration/programming updates confirmations are assumed to be retried if failed without consequence however confirmation is expected to be guaranteed

Payload Name	Description	CSWG LICs	C-I-A	Confidentiality	Integrity	Availability
ESI_firmware_update_cmd	Field Tool sends command to an ESI in the Meter to update the firmware on the device. ESI is not a electric grid critical infrastructure component. This payload is not used primarily for disturbance analysis.	13, 20, 21	M-H-L	Moderate harm to customer and utility if an adversary is able to ascertain the firmware update command, with device ID, firmware version number and cutover information	Severe operational reliable economic harm (if in-scale) if inaccurate Device ID, Firmware could lead to a device loading incorrect firmware, cutover time could lead to a device updating before the system is ready	Failed firmware updates commands are assumed to be retried if failed without consequence
ESI_firmware_update_confirmation	ESI - in Meter sends response indicating completion of a ESI firmware update to Firld Tool. ESI is not a electric grid critical infrastructure component. This payload is not used primarily for disturbance analysis.	13, 20, 21	M-M-M	Moderate harm to customer and utility if an adversary is able to ascertain the firmware update confirmation, with device ID, firmware version number and cutover information	Moderate harm if inaccurate device ID , success versus fail status and firmware version could lead a utility to believe a system is up to date when incorrect	Moderate harm if failed firmware updates confirmations are assumed to be retried if failed without consequence however confirmation is expected to be guaranteed
ESI-In-Utility_firmware_update_broadcast_cmd	AMI Head-End sends command to initiate a firmware update on all Utility ESIs. ESI is not an electric grid critical infrastructure component. This payload is not used primarily for disturbance analysis	13, 20	M-H-L	Moderate harm to customer and utility if an adversary is able to ascertain the firmware update command, with device ID, firmware version number and cut over information	Inaccurate Firmware could lead to a device loading incorrect firmware, cutover time could lead to a device updating before the system is ready	Failed firmware updates commands are assumed to be retried if failed without consequence
ESI-In-Utility_firmware_update_cmd	AMI Head-End sends command to initiate a firmware update on a single Utility ESI. ESI is not an electric grid critical infrastructure component. This payload is not used primarily for disturbance analysis.	13, 20	M-H-L	Moderate harm to customer and utility if an adversary is able to ascertain the firmware update command, with device ID, firmware version number and cut over information	Inaccurate Firmware could lead to a device loading incorrect firmware, cutover time could lead to a device updating before the system is ready	Failed firmware updates commands are assumed to be retried if failed without consequence
ESI-In-Utility_firmware_update_confirmation	Utility ESIs sends confirmation to Operations e.g. MDMS actor of completion of ESI firmware upgrade. ESI is not an electric grid critical infrastructure component. This payload is not used primarily for disturbance analysis.	13, 20	M-M-M	Moderate harm to customer and utility if an adversary is able to ascertain the firmware update confirmation, with device ID, firmware version number and cut over information	Inaccurate device ID , success versus fail status and firmware version could lead a utility to believe a system is up to date when incorrect	Failed firmware updates confirmations are assumed to be retried if failed without consequence however confirmation is expected to be guaranteed
ESI-In-Utility_firmware_update_multicast_cmd	AMI Head-End sends command to initiate an ESI firmware update to a defined group of Utility ESIs. ESI is not an electric grid critical infrastructure component. This payload is not used primarily for disturbance analysis.	13, 20	M-H-L	Moderate harm to customer and utility if an adversary is able to ascertain the firmware update command, with Group device ID, firmware version number and cut over information	Inaccurate device Group ID, Firmware could lead to a device loading incorrect firmware, cutover time could lead to a device updating before the system is ready	Failed firmware updates commands are assumed to be retried if failed without consequence

Payload Name	Description	CSWG LICs	C-I-A	Confidentiality	Integrity	Availability
FAN-GtWay_firmware_update_cmd	Distr SCADA FEP or Field Tool sends command to initiate a firmware update on a FAN Gateway. FAN Gateway is not a electric grid critical infrastructure component except if it the FAN Gateway provides telecommunications to any critcal infrastructure grid equipment. This payload is not used primarily for disturbance analysis.	13/14, 20	M-H-L	Moderate to serious impact on Utility's ability to monitor and operate the electric Distribution grid feeder devices, if an adversary is able to ascertain the firmware update command, with device ID, firmware version number and cutover information	Serious to severe harm on Utility's ability to monitor and operate the electric Distribution grid feeder devices (if used for comm with especially critical infrastructure or in-scale) if inaccurate Device ID, Firmware could lead to a device loading incorrect firmware, cutover time could lead to a device updating before the system is ready	Failed firmware updates commands are assumed to be retried if failed without serious consequence
FAN-GtWay_firmware_update_confirmation	FAN Gateway sends confirmation of completion of FAN Gateway firmware upgrade to Distr SCADA FEP or Field Tool. FAN Gateway is not a electric grid critical infrastructure component except if it the FAN Gateway provides telecommunications to critical infrastructure grid equipment. This payload is not used primarily for disturbance analysis.	13/14, 20	L-M-M	None to minimal harm to customer or organization for access to/disclosure of payload data	moderate to serious harm to ability of Utility's Distribution electric grid feeder device monitoring & operations (if in-scale) if inaccurate device ID , success versus fail status and firmware version could lead a utility to believe a system is up to date when incorrect	Moderate to serious harm to ability of Utility's Distribution electric grid feeder device monitoring & operations (if in-scale) if no confirmation received, requests for firmware update status "proxy for confirmations" are assumed to be used in these failure situations, however high reliability of confirmation delivery is expected
FAN-GtWay_program_update_cmd	Distr SCADA FEP or Field Tool sends command to initiate a Program/Configuration command to a FAN Gateway. FAN Gateway is not a electric grid critical infrastructure component except if it the FAN Gateway provides telecommunications to critical infrastructure grid equipment. This payload is not used primarily for disturbance analysis.	13/14, 20	M-H-L	Up to serious impact on Utility's ability to monitor and operate the electric Distribution grid feeder devices, if an adversary is able to ascertain the program update command, with device ID, program version number and cutover information	Serious to severe harm on Utility's ability to monitor and operate the electric Distribution grid feeder devices (if used for comm with especially critical infrastructure or in-scale) if inaccurate Device ID, program could lead to a device loading incorrect program, cutover time could lead to a device updating before the system is ready	Failed program updates commands are assumed to be retried if failed without serious consequence

Payload Name	Description	CSWG LICs	C-I-A	Confidentiality	Integrity	Availability
FAN-GtWay_program_update_confirmation	FAN Gateway sends response that a FAN Gateway configuration/program command has been completed to Distr SCADA FEP or Field Tool. FAN Gateway is not a electric grid critical infrastructure component except if it the FAN Gateway provides telecommunications to critical infrastructure grid equipment. This payload is not used primarily for disturbance analysis.	13/14, 20	L-M-M	None to minimal harm to customer or organization for access to/disclosure of payload data	up to serious harm to ability of Utility's Distribution electric grid feeder device monitoring & operations (if in-scale) if inaccurate device ID , success versus fail status and program version could lead a utility to believe a system is up to date when incorrect	Up to serious harm to ability of Utility's Distribution electric grid feeder device monitoring & operations (if in-scale) if failed program updates confirmations are assumed to be retried if failed without consequence, however confirmation is expected to be guaranteed
Fdr-dev-cntl_firmware_update_cmd	Distr SCADA FEP or Field Tool sends command to initiate a firmware update on a feeder device controller. Feeder device controller typically is not a electric grid critical infrastructure component. This payload is not used primarily for disturbance analysis.	1/2, 13/14, 20	M-H-L	Moderate to serious impact on Utility's ability to monitor and operate the electric Distribution grid feeder devices, if an adversary is able to ascertain the firmware update command, with device ID, firmware version number and cutover information	Serious to severe harm on Utility's ability to monitor and operate the electric Distribution grid feeder devices (especially for any critical infrastructure or in-scale) if inaccurate Device ID, Firmware could lead to a device loading incorrect firmware, cutover time could lead to a device updating before the system is ready	Failed firmware updates commands are assumed to be retried if failed without serious consequence
Fdr-dev-cntl_firmware_update_confirmation	Feeder Device controller sends confirmation of completion of feeder device controller firmware upgrade to Distr SCADA FEP or Field Tool. Feeder device controller typically is not a electric grid critical infrastructure component. This payload is not used primarily for disturbance analysis.	1/2, 13/14, 20	L-M-M	None to minimal harm to customer or organization for access to/disclosure of payload data	moderate to serious harm to ability of Utility's Distribution electric grid feeder device monitoring & operations (if in-scale) if inaccurate device ID , success versus fail status and firmware version could lead a utility to believe a system is up to date when incorrect	Moderate to serious harm to ability of Utility's Distribution electric grid feeder device monitoring & operations (if in-scale) if failed firmware updates confirmations are assumed to be retried if failed without consequence, however confirmation is expected to be guaranteed
Fdr-dev-cntl_program_update_cmd	Distr SCADA FEP or Field Tool sends command to initiate a Program/Configuration command to a feeder device controller. Feeder device controller typically is not a electric grid critical infrastructure component. This payload is not used primarily for disturbance analysis.	1/2, 13/14, 20	M-H-L	Moderate to serious impact on Utility's ability to monitor and operate the electric Distribution grid feeder devices, if an adversary is able to ascertain the program update command, with device ID, program version number and cutover information	Serious to severe harm on Utility's ability to monitor and operate the electric Distribution grid feeder devices (especially for any critical infrastructure or in-scale) if inaccurate Device ID, program could lead to a device loading incorrect program, cutover time could lead to a device updating before the system is ready	Failed program updates commands are assumed to be retried if failed without serious consequence

Payload Name	Description	CSWG LICs	C-I-A	Confidentiality	Integrity	Availability
Fdr-dev-cntl_program_update_confirmation	Feeder device controller sends response that a feeder device controller configuration/program command has been completed to Distr SCADA FEP or Field Tool. Feeder device controller typically is not a electric grid critical infrastructure component. This payload is not used primarily for disturbance analysis.	1/2, 13/14, 20	L-M-M	None to minimal harm to customer or organization for access to/disclosure of payload data	moderate to serious harm to ability of Utility's Distribution electric grid feeder device monitoring & operations (if in-scale) if inaccurate device ID , success versus fail status and program version could lead a utility to believe a system is up to date when incorrect	Moderate to serious harm to ability of Utility's Distribution electric grid feeder device monitoring & operations (if in-scale) if failed program updates confirmations are assumed to be retried if failed without consequence, however confirmation is expected to be guaranteed
metrology_firmware_update_broadcast_cmd	AMI Head-End sends command to initiate the metrology firmware update on a large body of meters. Meter is not a electric grid critical infrastructure component. This payload is not used primarily for disturbance analysis.	13, 20	M-H-L	Moderate harm to customer and utility if an adversary is able to ascertain the firmware update command, with device ID, firmware version number and cut over information	Inaccurate Firmware could lead to a device loading incorrect firmware, cutover time could lead to a device updating before the system is ready	Failed firmware updates commands are assumed to be retried if failed without consequence
metrology_firmware_update_cmd	AMI Head-End sends command to initiate a firmware update on a single meter. Meter is not a electric grid critical infrastructure component. This payload is not used primarily for disturbance analysis.	13, 20	M-H-L	Moderate harm to customer and utility if an adversary is able to ascertain the firmware update command, with device ID, firmware version number and cut over information	Inaccurate Firmware could lead to a device loading incorrect firmware, cutover time could lead to a device updating before the system is ready	Failed firmware updates commands are assumed to be retried if failed without consequence
metrology_firmware_update_confirmation	Meter sends confirmation of completion of firmware upgrade to MDMS and/or Field Tool. Meter is not a electric grid critical infrastructure component. This payload is not used primarily for disturbance analysis.	13, 20	M-M-M	Moderate harm to customer and utility if an adversary is able to ascertain the firmware update confirmation, with device ID, firmware version number and cut over information	Inaccurate device ID , success versus fail status and firmware version could lead a utility to believe a system is up to date when incorrect	Failed firmware updates confirmations are assumed to be retried if failed without consequence however confirmation is expected to be guaranteed
metrology_firmware_update_multicast_cmd	AMI Head-End sends command to initiate a firmware update to a defined group of meters. Meter is not a electric grid critical infrastructure component. This payload is not used primarily for disturbance analysis.	13, 20	M-H-L	Moderate harm to customer and utility if an adversary is able to ascertain the firmware update command, with Group device ID, firmware version number and cut over information	Inaccurate Device group ID, Firmware could lead to a device loading incorrect firmware, cutover time could lead to a device updating before the system is ready	Failed firmware updates commands are assumed to be retried if failed without consequence

Payload Name	Description	CSWG LICs	C-I-A	Confidentiality	Integrity	Availability
metrology_program_update_broadcast_cmd	AMI Head-End sends command to initiate a program update on a large body of meters. Meter is not a electric grid critical infrastructure component. This payload is not used primarily for disturbance analysis	13, 20	M-H-L	Moderate harm to customer and utility if an adversary is able to ascertain the configuration/program command with Group device ID, and cut over information	Inaccurate Group Device ID, configuration could lead to a device loading incorrect configuration cutover time could lead to a device updating before the system is ready	Failed configuration/program update commands are assumed to be retried if failed without consequence
metrology_program_update_cmd	AMI Head-End sends command to initiate a meter program update on a single meter. Meter is not a electric grid critical infrastructure component. This payload is not used primarily for disturbance analysis	13, 20	M-H-L	Moderate harm to customer and utility if an adversary is able to ascertain the configuration/program command with device ID, firmware version number and cut over information	Inaccurate Device ID, configuration could lead to a device loading incorrect configuration cutover time could lead to a device updating before the system is ready	Failed configuration/program update commands are assumed to be retried if failed without consequence
metrology_program_update_confirmation	Meter sends confirmation of completion of program change to MDMS and/or Field Tool. Meter is not a electric grid critical infrastructure component. This payload is not used primarily for disturbance analysis	13, 20	M-M-M	Moderate harm to customer and utility if an adversary is able to ascertain the configuration/program confirmation, with device ID, acknowledgement code and cut over information	Inaccurate device ID , success versus fail status and configuration/program version could lead a utility to believe a system is up to date when incorrect	Failed configuration/programming updates confirmations are assumed to be retried if failed without consequence however confirmation is expected to be guaranteed
metrology_program_update_multicast_cmd	AMI Head-End sends command to initiate a program change to a defined group of meters. Meter is not a electric grid critical infrastructure component. This payload is not used primarily for disturbance analysis	13, 20	M-H-L	Moderate harm to customer and utility if an adversary is able to ascertain the configuration/program command with Group device ID, and cut over information	Inaccurate Group Device ID, configuration could lead to a device loading incorrect configuration cutover time could lead to a device updating before the system is ready	Failed configuration/program update commands are assumed to be retried if failed without consequence
NIC_firmware_update_broadcast_cmd	Operations e.g. MDMS actor sends command to initiate a firmware update on a large body of meter NICs. Meter is not a electric grid critical infrastructure component. This payload is not used primarily for disturbance analysis	13, 20	M-H-L	Moderate harm to customer and utility if an adversary is able to ascertain the firmware update command, firmware version number and cut over information	Inaccurate Firmware could lead to a device loading incorrect firmware, cutover time could lead to a device updating before the system is ready	Failed firmware updates commands are assumed to be retried if failed without consequence
NIC_firmware_update_cmd	AMI Head-End and/or Field Tool sends command to initiate a firmware update on a single meter NIC. Meter is not a electric grid critical infrastructure component. This payload is not used primarily for disturbance analysis	13, 20	M-H-L	Moderate harm to customer and utility if an adversary is able to ascertain the firmware update command, with device ID, firmware version number and cut over information	Inaccurate Firmware could lead to a device loading incorrect firmware, cutover time could lead to a device updating before the system is ready	Failed firmware updates commands are assumed to be retried if failed without consequence

Payload Name	Description	CSWG LICs	C-I-A	Confidentiality	Integrity	Availability
NIC_firmware_update_confirmation	Meter sends confirmation of completion of NIC firmware upgrade to MDMS and/or Field Tool. Meter is not a electric grid critical infrastructure component. This payload is not used primarily for disturbance analysis	13, 20	M-M-M	Moderate harm to customer and utility if an adversary is able to ascertain the firmware update confirmation, with device ID, firmware version number and cut over information	Inaccurate device ID , success versus fail status and firmware version could lead a utility to believe a system is up to date when incorrect	Failed firmware updates confirmations are assumed to be retried if failed without consequence however confirmation is expected to be guaranteed
NIC_firmware_update_multicast_cmd	AMI Head-End sends command to initiate a NIC firmware update to a defined group of meter NIC. Meter is not a electric grid critical infrastructure component. This payload is not used primarily for disturbance analysis	13, 20	M-H-L	Moderate harm to customer and utility if an adversary is able to ascertain the firmware update command, with Group device ID, firmware version number and cut over information	Inaccurate device Group ID, Firmware could lead to a device loading incorrect firmware, cutover time could lead to a device updating before the system is ready	Failed firmware updates commands are assumed to be retried if failed without consequence
NIC_program_update_broadcast_cmd	AMI Head-End sends command to initiate a program update on a large body of meter NIC. Meter is not a electric grid critical infrastructure component. This payload is not used primarily for disturbance analysis	13, 20	M-H-L	Moderate harm to customer and utility if an adversary is able to ascertain the firmware update command, firmware version number and cut over information	Inaccurate Firmware could lead to a device loading incorrect firmware, cutover time could lead to a device updating before the system is ready	Failed firmware updates commands are assumed to be retried if failed without consequence
NIC_program_update_cmd	AMI Head-End and/or Field Tool sends command to initiate a meter program update on a single meter NIC. Meter is not a electric grid critical infrastructure component. This payload is not used primarily for disturbance analysis	13, 20	M-H-L	Moderate harm to customer and utility if an adversary is able to ascertain the configuration/program command with device ID, firmware version number and cut over information	Inaccurate Device ID, configuration could lead to a device loading incorrect configuration cutover time could lead to a device updating before the system is ready	Failed configuration/program update commands are assumed to be retried if failed without consequence
NIC_program_update_confirmation	Meter sends confirmation of completion of NIC program change to MDMS and/or Field Tool. Meter is not a electric grid critical infrastructure component. This payload is not used primarily for disturbance analysis	13, 20	M-M-M	Moderate harm to customer and utility if an adversary is able to ascertain the configuration/program confirmation, with device ID, acknowledgement code and cut over information	Inaccurate device ID , success versus fail status and configuration/program version could lead a utility to believe a system is up to date when incorrect	Failed configuration/programming updates confirmations are assumed to be retried if failed without consequence however confirmation is expected to be guaranteed
NIC_program_update_multicast_cmd	AMI Head-End sends command to initiate a NIC program change to a defined group of meter NICs. Meter is not a electric grid critical infrastructure component. This payload is not used primarily for disturbance analysis	13, 20	M-H-L	Moderate harm to customer and utility if an adversary is able to ascertain the configuration/program command with Group device ID, and cut over information	Inaccurate Group Device ID, configuration could lead to a device loading incorrect configuration cutover time could lead to a device updating before the system is ready	Failed configuration/program update commands are assumed to be retried if failed without consequence

5.9.4 Scenarios

5.9.4.1 Scenario: Utility / Operator Updates Firmware on a DAP

Narrative

The Utility wishes to upgrade/downgrade the firmware on a DAP. The firmware is pushed to the DAP via the DAP_firmware_update_cmd payload. Once complete the DAP sends the DAP_firmware_update_confirmation payload as confirmation.

Business Objectives

Payload Name	Payload Type	Payload Attributes	PAP02 Baseload (routine)	PAP02 Highload (full load)	Originating Actor	Destination Actor	Reliability	Latency	When	How Often	Payload Size
DAP_firmware_update_cmd	cmd	device ID, timeout, firmware version number, cut over time or cut over parameters, firmware update	0	X	AMI Head-End(j),Field Tool	DAPjm	> 98%	< 5 min,< 10 min	7AM - 6PM	2 per | DAPjm per | year,1 per | DAPjm per | firmware update from Field Tool event,x per | DAPjm per | year	400k - 750k
DAP_firmware_update_confirmation	resp-data	device ID, success or fail notification, firmware revision information	0	X	DAPjm	MDMS, Field Tool	> 98%	< 15 sec	7AM - 6PM	1 per | DAPjm per | firmware update event	50

5.9.4.2 Scenario: Utility / Operator Changes Configuration/Programing on a DAP

Narrative

The Utility wishes to change the configuration / programing of a DAP. The configuration is pushed to the DAP via the DAP_program_update_cmd payload. The DAP is expected to send the DAP_program_update_confirmation payload to indicate whether the update was successful.

Business Objectives

Payload Name	Payload Type	Payload Attributes	PAP02 Baseload (routine)	PAP02 Highload (full load)	Originating Actor	Destination Actor	Reliability	Latency	When	How Often	Payload Size
DAP_program_update_cmd	cmd	device group ID, timeout, firmware version number, cut over time or cut over parameters, firmware update	0	X	AMI Head-End(j),Field Tool	DAPjm	> 98%	< 5 min	7AM - 6PM	2 per | DAPjm per | year	25k - 50k
DAP_program_update_confirmation	resp-data	device ID, acknowledgement code	0	X	DAPjm	MDMS, Field Tool	> 98%	< 15 sec	7AM - 6PM	1 per | DAPjm per | metrology firmware update event,1 per | DAPjm per | program update event	50

5.9.4.3 Scenario: ESI firmware is updated with a Field tool

Narrative

In this scenario, the ESI is updated via a field tool by a technician. This could occur while the ESI is installed in the field, at the Utility, or by the manufacturer. The firmware is sent with the ESI_firmware_update_cmd payload and confirmation of the update is sent with the ESI_firmware_update_confirmation payload.

Business Objectives

Payload Name	Payload Type	Payload Attributes	PAP02 Baseload (routine)	PAP02 Highload (full load)	Originating Actor	Destination Actor	Reliability	Latency	When	How Often	Payload Size
ESI_firmware_update_cmd	cmd	device ID, firmware version number, firmware update	0	X	Field Tool	ESI - In Meter, ESI - Utility, ESI - 3rd Party	> 98%	2 min - < 10 min	7AM - 6PM	1 per | ESI per | ESI firmware update from Field Tool event	400k - 750k
ESI_firmware_update_confirmation	resp-data	device ID, acknowledgement code	0	X	ESI - In Meter, ESI - Utility, ESI - 3rd Party	Field Tool,MDMS	> 98%	< 15 sec	7AM - 6PM	1 per | ESI per | ESI firmware update from Field Tool event	50

5.9.4.4 Scenario: ESI firmware is updated via the Utilities AMI system

Narrative

In this scenario the Utilities AMI System is used to update the ESI firmware. The firmware can be sent unicast, broadcast or multicast and are called ESI-In-Utility_firmware_update_cmd, ESI-In-Utility_firmware_update_broadcast_cmd, and ESI-In-Utility_firmware_update_multicast_cmd respectively. No matter how the firmware is sent to the ESI, the ESI shall respond with the ESI-In-Utility_firmware_update_confirmation payload after the operation is completed.

Business Objectives

Payload Name	Payload Type	Payload Attributes	PAP02 Baseload (routine)	PAP02 Highload (full load)	Originating Actor	Destination Actor	Reliability	Latency	When	How Often	Payload Size
ESI-In-Utility_firmware_update_broadcast_cmd	cmd	command code, firmware-update	0	X	AMI Head-End(j)	ESI - In Meter, ESI - Utility	> 98%	< 7 day per 100,000 ESI-In-Utility	24x7	1 per | ESIInUtl-type per | ESI firmware update broadcast event	150k - 1,000k
ESI-In-Utility_firmware_update_cmd	cmd	device ID, command code, firmware-update	0	X	AMI Head-End(j)	ESI - In Meter, ESI - Utility	> 98%	20 min - < 4 hr per 1 mtr	24x7	2 per | ESIInUtl per | year	150k - 1,000k
ESI-In-Utility_firmware_update_confirmation	resp-data	device ID, acknowledgement code	0	X	ESI - In Meter, ESI - Utility	MDMS	> 98%	< 15 sec	24x7	1 per | ESIInUtl per | ESI firmware update event	50
ESI-In-Utility_firmware_update_multicast_cmd	cmd	group ID, command code, firmware-update	0	X	AMI Head-End(j)	ESI - In Meter, ESI - Utility	> 98%	< 7 day per 100,000 ESI-In-Utility	24x7	1 per | ESIInUtl-type per | ESI firmware update per multicast group request event	150k - 1,000k

5.9.4.5 Scenario: Utility updates the FAN Gateway Firmware

Narrative

In this scenario, the Utility updates the firmware of the FAN Gateway with the FAN_GtWay_firmware_update_cmd payload. The FAN Gateway shall respond with the FAN-GtWay_firmware_update_confirmation payload.

Business Objectives

Payload Name	Payload Type	Payload Attributes	PAP02 Baseload (routine)	PAP02 Highload (full load)	Originating Actor	Destination Actor	Reliability	Latency	When	How Often	Payload Size
FAN-GtWay_firmware_update_cmd	cmd	device ID, timeout, firmware version number, cut over time or cut over parameters, firmware update	0	X	Distr. SCADA FEP,Field Tool	FAN gateway - field, FAN gateway - sub	> 99%	< 5 min,< 10 min	7AM - 6PM	2 per | FANgw(x) per | year,60 per 1000 per | FANgw(x) per | firmware update cycle from Field Tool per year	400k - 750k
FAN-GtWay_firmware_update_confirmation	resp-data	device ID, success or fail notification, firmware revision information	0	X	FAN gateway - field, FAN gateway - sub	Field Tools,Analytic DB	> 99%	< 5 sec,< 15 sec	7AM - 6PM	1 per | FANgw(x) per | firmware update from Field Tool,1 per | FANgw(x) per | update	50

5.9.4.6 Scenario: Utility changes FAN Gateway configuration/programming

Narrative

In this scenario, the utility sends the configuration FAN-GtWay_program_update_cmd payload to the FAN Gateway. The FAN Gateway shall send the FAN-GtWay_program_update_confirmation after receipt of the command.

Business Objectives

Payload Name	Payload Type	Payload Attributes	PAP02 Baseload (routine)	PAP02 Highload (full load)	Originating Actor	Destination Actor	Reliability	Latency	When	How Often	Payload Size
FAN-GtWay_program_update_cmd	cmd	device group ID, timeout, firmware version number, cut over time or cut over parameters, firmware update	0	X	Distr. SCADA FEP,Field Tool	FAN gateway - field, FAN gateway - sub	> 99%	< 5 min	7AM - 6PM	2 per | FANgw(x) per | year,60 per 1000 per | FANgw(x) per | program update cycle per year	25k - 50k
FAN-GtWay_program_update_confirmation	resp-data	device ID, acknowledgement code	0	X	FAN gateway - field, FAN gateway - sub	Field Tools,Analytic DB	> 99%	< 15 sec	7AM - 6PM	1 per | FANgw(x) per | update	50

5.9.4.7 Scenario: Utility performs a firmware update on a Distribution Automation device

Narrative

The utility sends the firmware to be updated in the Fdr-dev-cntl-firmware-update_cmd payload to the desired Distribution Automation device. The device receiving the update shall send the Fdr-dev-cntl_firmware_update_confirmation after receipt of the update.

NOTE: The Destination actor may be any of the included actor in the Destination Actor.

Business Objectives

Payload Name	Payload Type	Payload Attributes	PAP02 Baseload (routine)	PAP02 Highload (full load)	Originating Actor	Destination Actor	Reliability	Latency	When	How Often	Payload Size
Fdr-dev-cntl_firmware_update_cmd	cmd	device ID, timeout, firmware version number, cut over time or cut over parameters, firmware update	0	X	Distr. SCADA FEP,Field Tool	Feeder Regulator, Feeder Cap Bank, Feeder Sensor, Feeder sectionalizer, Feeder Switch, Feeder Recloser, Distr. Cust. Storage, Distr. Cust. Generation	> 99%	20 min - < 4 hr per 1 Distr device,2 min - < 10 min	7AM - 6PM	1 per | fdrDevice per | year,60 per 1000 per | fdrDevice per | cntl firmware update cycle from Field Tool per year	400k - 2,000k
Fdr-dev-cntl_firmware_update_confirmation	resp-data	device ID, success or fail notification, firmware revision information	0	X	Feeder Regulator, Feeder Cap Bank, Feeder Sensor, Feeder sectionalizer, Feeder Switch, Feeder Recloser, Distr. Cust. Storage, Distr. Cust. Generation	Analytic DB,Field Tool	> 98%,> 99%	< 15 sec,< 5 sec	7AM - 6PM	1 per | fdrDevice per | update,1 per | fdrDevice per | cntl firmware update from Field Tool	50

5.9.4.8 Scenario: Utility changes configuration/programming on Distribution Automation devices

Narrative

In this scenario, the utility sends the configuration/programming changes in the Fdr-dev-cntl_program_update_cmd payload to the desired actor in the Destination Actor column shown below. The desired actor shall send the Fdr-dev-cntl_program_update_confirmation after receipt of the update command.

Business Objectives

Payload Name	Payload Type	Payload Attributes	PAP02 Baseload (routine)	PAP02 Highload (full load)	Originating Actor	Destination Actor	Reliability	Latency	When	How Often	Payload Size
Fdr-dev-cntl_program_update_cmd	cmd	device group ID, timeout, firmware version number, cut over time or cut over parameters, firmware update	0	X	Distr. SCADA FEP,Field Tool	Feeder Regulator, Feeder Cap Bank, Feeder Sensor, Feeder sectionalizer, Feeder Switch, Feeder Recloser, Distr. Cust. Storage, Distr. Cust. Generation	> 99%	10 min - < 2 hr per 1 Distr device,< 1 min	7AM - 6PM	3 per | fdrDevice per | cntl program update per year (1st year), 1 per | fdrDevice per | cntl program update per year (past 1st year),60 per 1000 per | fdrDevice per | cntl program update cycle from Field Tool per year	25k - 50k
Fdr-dev-cntl_program_update_confirmation	resp-data	device ID, acknowledgement code	0	X	Feeder Regulator, Feeder Cap Bank, Feeder Sensor, Feeder sectionalizer, Feeder Switch, Feeder Recloser, Distr. Cust. Storage, Distr.	Analytic DB,Field Tool	> 99%	< 15 sec	7AM - 6PM	1 per | fdrDevice per | cntl program update,1 per | fdrDevice per | cntl program update from Field Tool	50

Payload Name	Payload Type	Payload Attributes	PAP02 Baseload (routine)	PAP02 Highload (full load)	Originating Actor	Destination Actor	Reliability	Latency	When	How Often	Payload Size
					Cust. Generation						

5.9.4.9 Scenario: Utility/Operator performs a firmware update on electric, water or gas meter metrology

Narrative

In this scenario, the utility sends the metrology_firmware_update_cmd, metrology_firmware_update_broadcast_cmd or metrology_firmware_update_multicast_cmd payload to the desired electric, gas or water meter desired. This payload may be sent via unicast, broadcast or multicast respective to the aforementioned payloads. Regardless of how the update payload was sent to the electric, gas or water meter, the destination actor shall send the metrology_firmware_update_confirmation payload after receiving the update command.

Business Objectives

Payload Name	Payload Type	Payload Attributes	PAP02 Baseload (routine)	PAP02 Highload (full load)	Originating Actor	Destination Actor	Reliability	Latency	When	How Often	Payload Size
metrology_firmware_update_broadcast_cmd	cmd	timeout, firmware version number , cut over time or cut over parameters	0	X	AMI Head-End(j)	2-Way Meter - Electr, 2-Way Meter - Gas, 2-Way Meter - Water	> 98%	< 7 day per 100,000 mtrs	24x7	1 per | Mtr-type per | metrology firmware update broadcast event	400k - 2,000k
metrology_firmware_update_cmd	cmd	device ID, timeout, firmware version number , cut over time or cut over parameters	0	X	AMI Head-End(j),Field Tool	2-Way Meter - Electr, 2-Way Meter - Gas, 2-Way Meter - Water	> 98%	20 min - < 4 hr per 1 mtr,3 min - < 15 min	24x7, 7AM - 6PM	2 per | Mtr per | metrology firmware update per year,1 per | Mtr per | metrology firmware update from Field Tool event	400k - 2,000k

metrology_firmware_update_confirmation	resp-data	device ID, success or fail notification, firmware revision information	0	X	2-Way Meter - Electr, 2-Way Meter - Gas, 2-Way Meter - Water	MDMS,Field Tool	> 98%	< 15 sec,< 5 sec	24x7, 7AM - 6PM	1 per | Mtr per | metrology firmware update event,1 per | Mtr per | metrology firmware update from Field Tool event	50
metrology_firmware_update_multicast_cmd	cmd	device group ID, timeout, firmware version number , cut over time or cut over parameters	0	X	AMI Head-End(j)	2-Way Meter - Electr, 2-Way Meter - Gas, 2-Way Meter - Water	> 98%	< 7 day per 100,000 mtrs	24x7	1 per | Mtr-type per | metrology firmware update per multicast group request event	400k - 2,000k

5.9.4.10 Scenario: Utilty/Operator performs a configuration/programming update on an Electric, Gas or Water meter metrology

Narrative

In this scenario, the utility sends the metrology_program_update_cmd, metrology_program_update_broadcast_cmd or metrology_program_update_multicast_cmd payload to the desired electric, gas or water meter desired. This payload may be sent via unicast, broadcast or multicast respective to the aforementioned payloads. Regardless of how the update payload was sent to the electric, gas or water meter, the destination actor shall send the metrology_program_update_confirmation payload after receiving the update command.

Business Objectives

Payload Name	Payload Type	Payload Attributes	PAP02 Baseload (routine)	PAP02 Highload (full load)	Originating Actor	Destination Actor	Reliability	Latency	When	How Often	Payload Size
metrology_program_update_broadcast_cmd	cmd	timeout, program version number, cut over time or cut over parameters, program update	0	X	AMI Head-End(j)	2-Way Meter - Electr, 2-Way Meter - Gas, 2-Way Meter - Water	> 98%	< 3 day per 100,000 mtrs	24x7	1 per | Mtr-type per | metrology program update broadcast event	25k - 50k
metrology_program_update_cmd	cmd	device ID, timeout, program version number, cut over time or cut over parameters, program update	0	X	AMI Head-End(j),Field Tool	2-Way Meter - Electr, 2-Way Meter - Gas, 2-Way Meter - Water	> 98%	10 min - < 2 hr per 1 mtr,< 1 min	24x7, 7AM - 6PM	5 per 1000 per | Mtr per | day,1 per | Mtr per | metrology program update from Field Tool event	25k - 50k
metrology_program_update_confirmation	resp-data	device ID, success or fail notification, program revision information	0	X	2-Way Meter - Electr, 2-Way Meter - Gas, 2-Way Meter - Water	MDMS,Field Tool	> 98%	< 15 sec	24x7, 7AM - 6PM	1 per | Mtr per | metrology program update event,1	50

Payload Name	Payload Type	Payload Attributes	PAP02 Baseload (routine)	PAP02 Highload (full load)	Originating Actor	Destination Actor	Reliability	Latency	When	How Often	Payload Size
										per | Mtr per | metrology program update from Field Tool event	
metrology_program_update_multicast_cmd	cmd	device group ID, timeout, program version information, cut over time or cut over parameters, program update	0	X	AMI Head-End(j)	2-Way Meter - Electr, 2-Way Meter - Gas, 2-Way Meter - Water	> 98%	< 3 day per 100,000 mtrs	24x7	1 per | Mtr-type per | metrology program update per multicast group request event	25k - 50k

5.9.4.11 Scenario: Utility / Operator performs a firmware update on an electric, gas, water meter or Distribution Automation Device NIC.

Narrative

In this scenario, the utility wishes to update the firmware on the NIC (Network Interface Card) on an electric, gas, water meter or distribution automation device and sends the NIC_firmware_update_cmd, NIC_firmware_update_broadcast_cmd or NIC_firmware_update_multicast_cmd payload to the desired electric, gas or water meter desired. This payload may be sent via unicast, broadcast or multicast respective to the aforementioned payloads. Regardless of how the update payload was sent to the electric, gas,water meter or Distribution Automation Device, the destination actor shall send the NIC_firmware_update_confirmation payload after receiving the update command.

NOTE: Broadcast and Multicast requirements for Distribution Automation are not included in SG-Network work

Business Objectives

Payload Name	Payload Type	Payload Attributes	PAP02 Baseload (routine)	PAP02 Highload (full load)	Originating Actor	Destination Actor	Reliability	Latency	When	How Often	Payload Size
NIC_firmware_update_broadcast_cmd	cmd	timeout, firmware version number cut over time or cut over parameters, firmware update	0	X	AMI Head-End(j)	2-Way Meter - Electr, 2-Way Meter - Gas, 2-Way Meter - Water	> 98%	< 7 day per 100,000 mtrs	24x7	1 per | Mtr-type per | NIC firmware update broadcast event	400k - 2,000k

Payload Name	Payload Type	Payload Attributes	PAP02 Baseload (routine)	PAP02 Highload (full load)	Originating Actor	Destination Actor	Reliability	Latency	When	How Often	Payload Size
NIC_firmware_update_cmd	cmd	device ID, timeout, firmware version number, cut over time or cut over parameters, firmware update	0	X	AMI Head-End(j),Field Tool,Distr. SCADA FEP	2-Way Meter - Electr, 2-Way Meter - Gas, 2-Way Meter - Water,FAN gateway - field, FAN gateway - sub, Feeder Regulator, Feeder Cap Bank, Feeder Sensor, Feeder sectionalizer, Feeder Switch, Feeder Recloser, Distr. Cust. Storage, Distr. Cust. Generation	> 98%,> 99%	20 min - < 4 hr per 1 mtr,2 min - < 10 min,20 min - < 4 hr per 1 Distr device	24x7, 7AM - 6PM	2 per | Mtr per | NIC firmware update per year,1 per | Mtr per | NIC firmware update from Field Tool event,1 per | fdrDevice per | year,60 per 1000 per | fdrDevice per | NIC firmware or program update cycle from Field Tool per year	400k - 2,000k
NIC_firmware_update_confirmation	resp-data	device ID, success or fail notification, firmware revision information	0	X	2-Way Meter - Electr, 2-Way Meter - Gas, 2-Way Meter - Water,FAN gateway - field, FAN gateway - sub, Feeder Regulator, Feeder Cap Bank, Feeder Sensor, Feeder sectionalizer, Feeder Switch, Feeder Recloser, Distr. Cust. Storage, Distr. Cust. Generation	MDMS,Field Tool,Analytic DB,AMI Head-End(j)	> 98%,> 99%	< 15 sec,< 5 sec	24x7, 7AM - 6PM	1 per | Mtr per | NIC firmware update event,1 per | Mtr per | NIC firmware update from Field Tool event,1 per | fdrDevice per | NIC firmware update,1 per | fdrDevice per | update from Field Tool	50
NIC_firmware_update_multicast_cmd	cmd	device group ID, timeout, firmware version number, cut over time or cut over parameters, firmware update	0	X	AMI Head-End(j)	2-Way Meter - Electr, 2-Way Meter - Gas, 2-Way Meter - Water	> 98%	< 7 day per 100,000 mtrs	24x7	1 per | Mtr-type per | NIC firmware update per multicast group request event	400k - 2,000k

5.9.4.12 Scenario: Utility/Operator performs a configuration/programming update on an Electric, Gas or Water meter or Distribution Automation device NIC

Narrative

In this scenario, the utility wishes to update the configuration/programming on the NIC (Network Interface Card) on an electric, gas or water meter, or Distribution Automation Device and sends the NIC_program_update_cmd, NIC_program_update_broadcast_cmd or NIC_program_update_multicast_cmd payload to the desired electric, gas or water meter desired. This payload may be sent via unicast, broadcast or multicast respective to the aforementioned payloads. Regardless of how the update payload was sent to the electric, gas or water meter or Distribution Automation device, the destination actor shall send the NIC_program_update_confirmation payload after receiving the update command.

NOTE: Broadcast and Multicast requirements for Distribution Automation are not included in SG-Network work

Business Objectives

Payload Name	Payload Type	Payload Attributes	PAP02 Baseload (routine)	PAP02 Highload (full load)	Originating Actor	Destination Actor	Reliability	Latency	When	How Often	Payload Size
NIC_program_update_broadcast_cmd	cmd	timeout, program version number, cut over time or cut over parameters, program update	0	X	AMI Head-End(j)	2-Way Meter - Electr, 2-Way Meter - Gas, 2-Way Meter - Water	> 98%	< 3 day per 100,000 mtrs	24x7	1 per | Mtr-type per | NIC program update broadcast event	25k - 50k

Payload Name	Payload Type	Payload Attributes	PAP02 Baseload (routine)	PAP02 Highload (full load)	Originating Actor	Destination Actor	Reliability	Latency	When	How Often	Payload Size
NIC_program_update_cmd	cmd	device ID, timeout, program version number, cut over time or cut over parameters, program update	0	X	AMI Head-End(j),Field Tool,Distr. SCADA FEP	2-Way Meter - Electr, 2-Way Meter - Gas, 2-Way Meter - Water,FAN gateway - field, FAN gateway - sub, Feeder Regulator, Feeder Cap Bank, Feeder Sensor, Feeder sectionalizer, Feeder Switch, Feeder Recloser, Distr. Cust. Storage, Distr. Cust. Generation ,FAN gateway - field, FAN gateway - sub, Feeder Regulator, Feeder Cap Bank, Feeder Sensor, Feeder Switch, Feeder Recloser, Distr. Cust. Storage, Distr. Cust. Generation	> 98%,> 99%	10 min - < 2 hr per 1 mtr,< 1 min,10 min - < 2 hr per 1 Distr device	24x7, 7AM - 6PM	5 per 1000 per | Mtr per | day,1 per | Mtr per | NIC firmware update from Field Tool event,1 per | fdrDevice per | year,60 per 1000 per | fdrDevice per | NIC firmware or program update cycle from Field Tool per year	1k - 50k

Payload Name	Payload Type	Payload Attributes	PAP02 Baseload (routine)	PAP02 Highload (full load)	Originating Actor	Destination Actor	Reliability	Latency	When	How Often	Payload Size
NIC_program_update_confirmation	resp-data	device ID, success or fail notification, program revision information, program update	0	X	2-Way Meter - Electr, 2-Way Meter - Gas, 2-Way Meter - Water,FAN gateway - field, FAN gateway - sub, Feeder Regulator, Feeder Cap Bank, Feeder Sensor, Feeder sectionalizer, Feeder Switch, Feeder Recloser, Distr. Cust. Storage, Distr. Cust. Generation	MDMS,Field Tool,Analytic DB,AMI Head-End(j)	> 98%,> 99%	< 15 sec	24x7, 7AM - 6PM	1 per | Mtr per | NIC firmware update event,1 per | Mtr per | NIC firmware update from Field Tool event,1 per | fdrDevice per | NIC program update,1 per | fdrDevice per | update from Field Tool	50
NIC_program_update_multicast_cmd	cmd	device group ID, timeout, program version information, cut over time or cut over parameters	0	X	AMI Head-End(j)	2-Way Meter - Electr, 2-Way Meter - Gas, 2-Way Meter - Water	> 98%	< 3 day per 100,000 mtrs	24x7	1 per | Mtr-type per | NIC program update per multicast group request event	25k - 50k

5.10 Meter Reading Use Cases

5.10.1 Overview

The Meter Reading use cases described in this body of work include the following scenarios. For each scenario the primary command, response and failure payloads are described

- On Demand Meter read
- On Demand Meter read failure
- On Demand Meter interval period read
- Normal Meter Reading Operations
- Bulk Meter Interval data read

5.10.1.1 Reference Architecture with Domains, Actors and Interfaces

Smart Grid Conceptual Actors / Data Flow Diagram – Cross Domain Network Focused – OpenSG / SG-Network TF

Meter Read Use Case

DRAFT 14Feb2012
Base – file SG-NET-diagram-r5.1.vsd
page size: ANSI-D

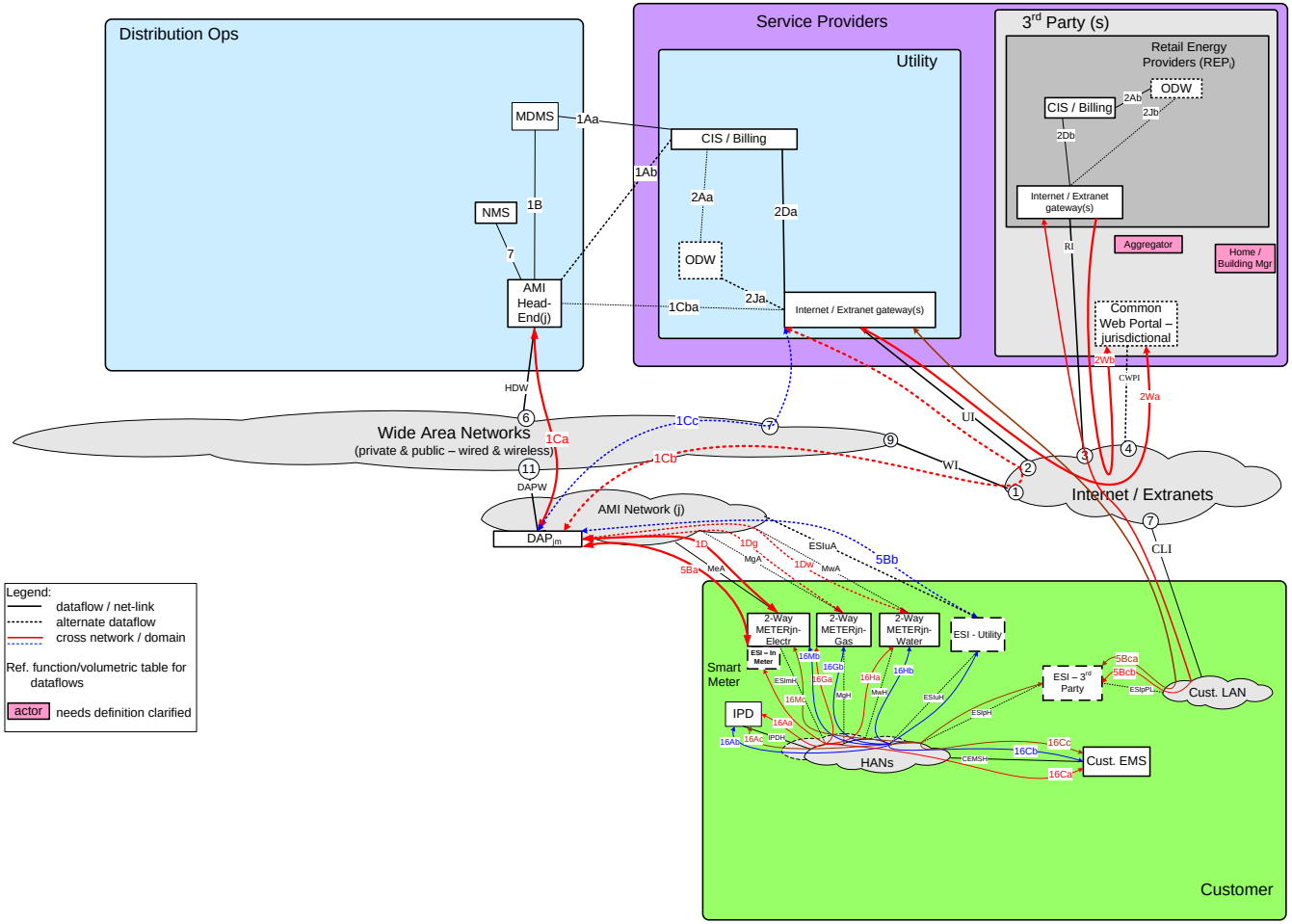

5.10.1.2 Possible telecommunications paths

CIS / Billing - Utility <-> Meter – 2way (no ESI) Communication Path Options

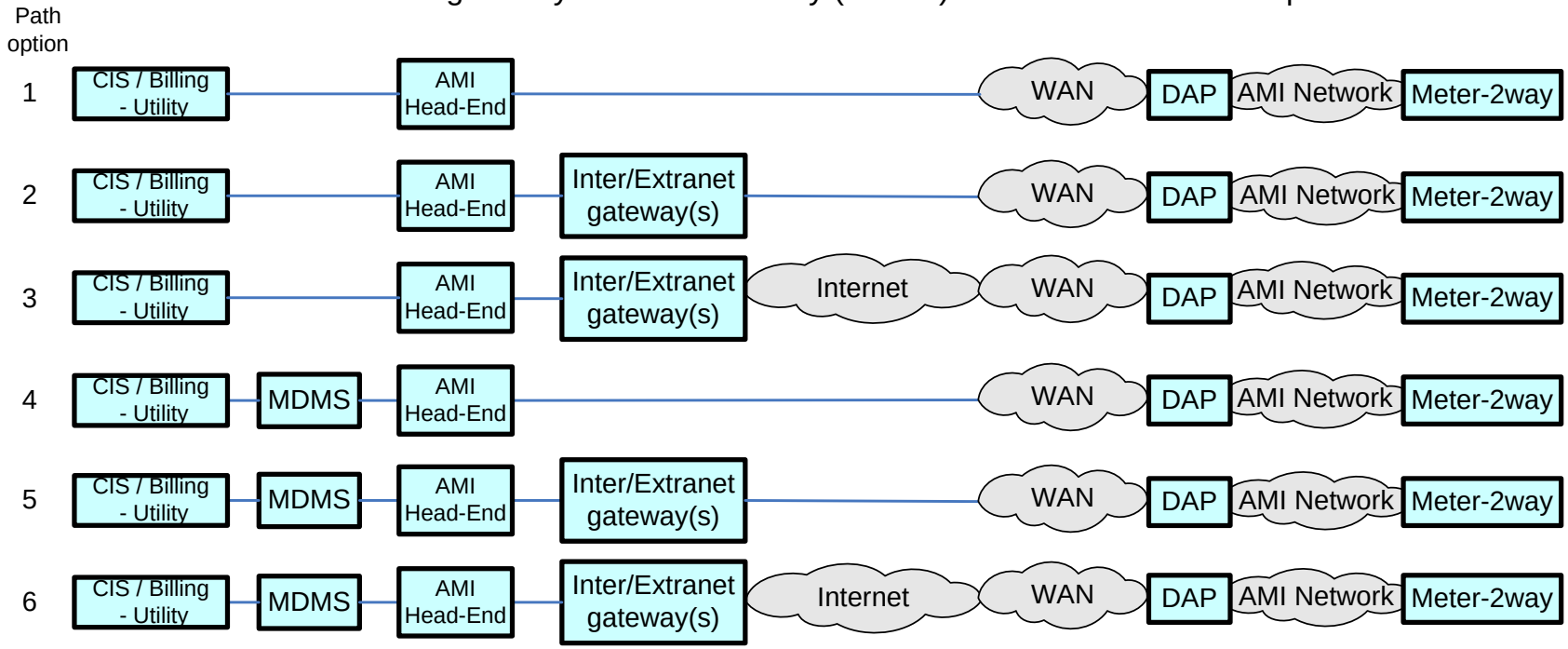

CIS / Billing - Utility <-> Meter-2Way (via ESI) Communication Path Options

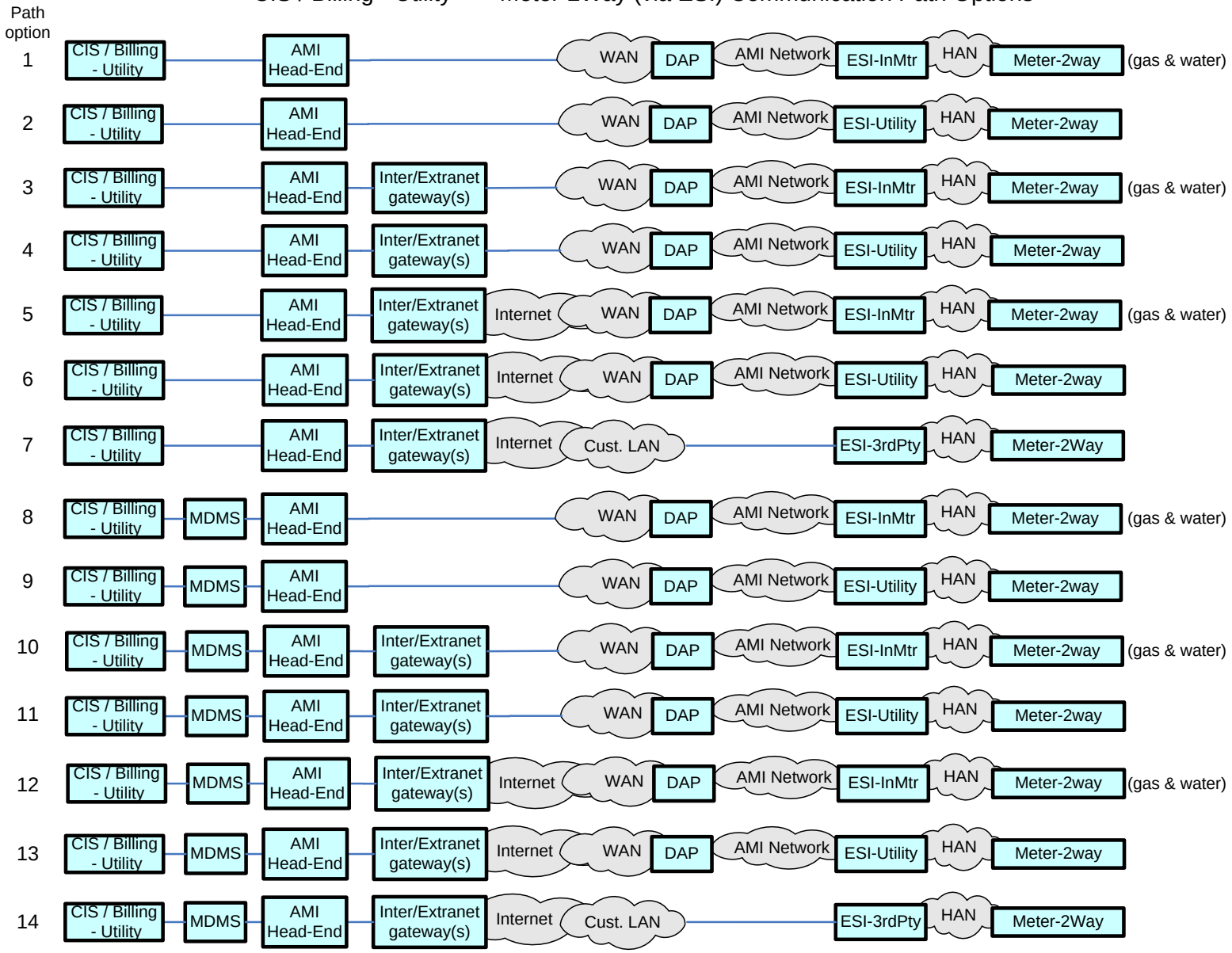

1540

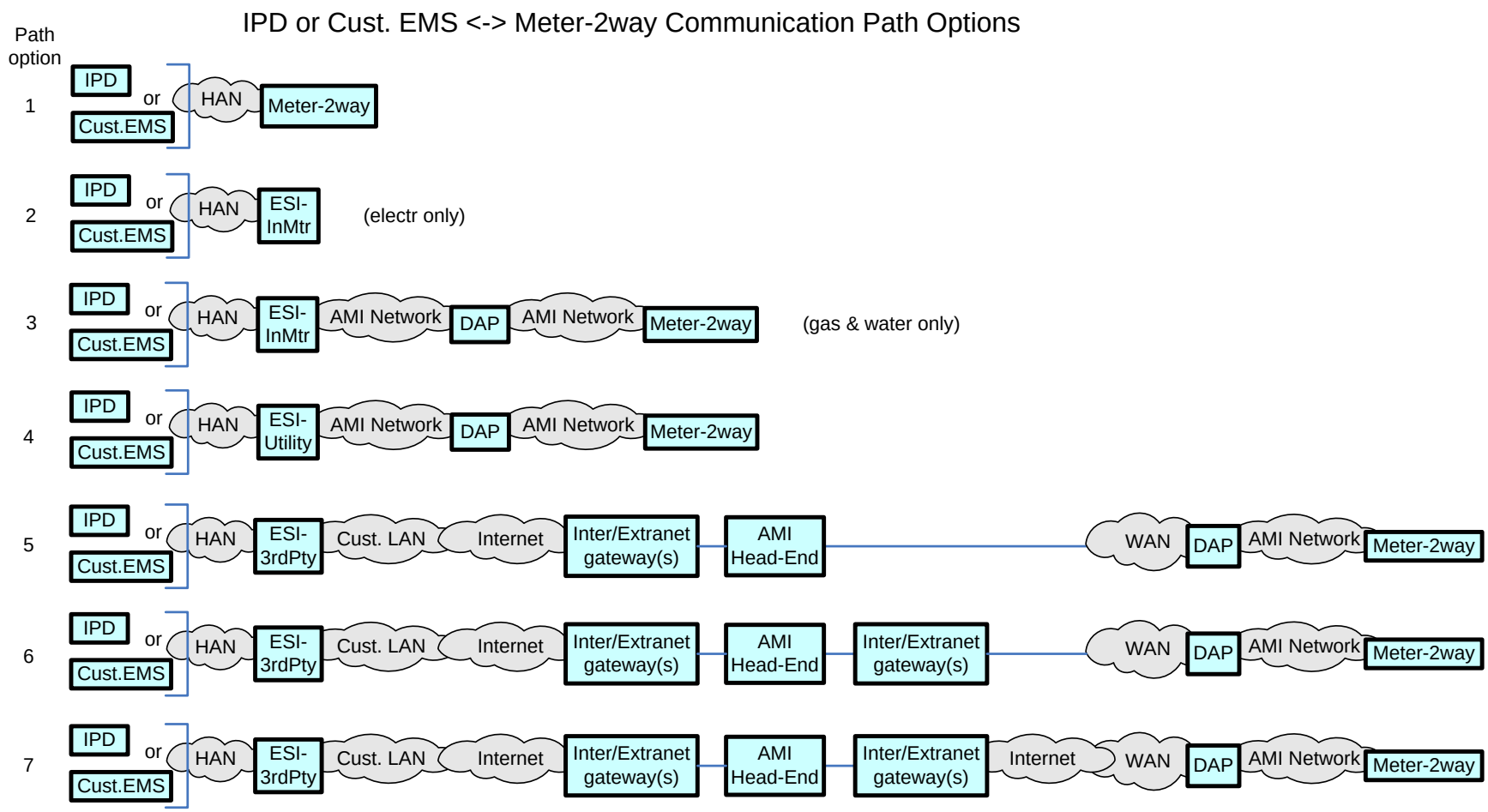
IPD or Cust. EMS <-> Meter-2way Communication Path Options
Path option
1
IPD
or
Cust.EMS
HAN
Meter-2way
2
IPD
or
Cust.EMS
HAN
ESI-InMtr
(electr only)
3
IPD
or
Cust.EMS
HAN
ESI-InMtr
AMI Network
DAP
AMI Network
Meter-2way
(gas & water only)
4
IPD
or
Cust.EMS
HAN
ESI-Utility
AMI Network
DAP
AMI Network
Meter-2way
5
IPD
or
Cust.EMS
HAN
ESI-3rdPty
Cust. LAN
Internet
Inter/Extranet gateway(s)
AMI Head-End
WAN
DAP
AMI Network
Meter-2way
6
IPD
or
Cust.EMS
HAN
ESI-3rdPty
Cust. LAN
Internet
Inter/Extranet gateway(s)
AMI Head-End
Inter/Extranet gateway(s)
WAN
DAP
AMI Network
Meter-2way
7
IPD
or
Cust.EMS
HAN
ESI-3rdPty
Cust. LAN
Internet
Inter/Extranet gateway(s)
AMI Head-End
Inter/Extranet gateway(s)
Internet
WAN
DAP
AMI Network
Meter-2way

5.10.2 Actors

Actor	Description
2-Way Meter - Electr	A bi-directional communication device used to perform measurement of electrical energy usage for residential use.
2-Way Meter - Gas	A bi-directional communication device used to perform measurement of gas consumption for residential use.
2-Way Meter - Water	A bi-directional communication device used to perform measurement of water consumption for residential use.
AMI Head-End(j)	The AMI head end is responsible for the operation and coordination of AMI system components. It represents the central nervous system of the AMI system.
CIS/Billing - Utility	A utility billing system used for reconciling customer payments for electricity usage. This system may also be used for managing vendors of electricity generation.
Cust. EMS	A customer owned energy management system used to manage energy with a premises.
DAPjm	This is the Data Aggregation Point on the NAN. It is essentially the point of convergence for all communication between SG devices and utility back office systems. In this specific use case it provides a communication conduit for AMI Smart Meters.
ESI - 3rd Party	An ESI, owned by the Customer and not provided by the Utility, which enables secure interactions between HAN Devices Registered on its network and the service provider e.g. REP. The 3rd Party ESI functionality may reside in the Customer EMS or customer's
ESI - In Meter	An ESI, owned by the Utility and resides in the Utility meter, which enables secure interactions between HAN Devices Registered on its network and the Utility AMI.
ESI - Utility	An ESI, owned by the Utility, which enables secure interactions between HAN Devices Registered on its network and the Utility AMI. The Utility ESI functionality may reside in the Customer EMS or customer broadband router.
Internet / Extranet gateway(s) - Utility	These are gateways used to connect internal utility networks with external networks.
IPD	In Premise Display
MDMS	The application responsible for the collection and retrieval of all relevant customer information for purposes of billing and facilitating interaction.
NMS	A system or series of systems that are utilized to operate and manage utility assets that interact on any given network. These assets are comprised of both hardware and software components that require ongoing monitoring and management.

5.10.3 Applicable Payload Information

Payload Name	Description	CSWG LICs	C-I-A	Confidentiality	Integrity	Availability
bulk_Mtr-read_cmd	CIS/Billing - Utility requests several large files (batches) of Utility meter information from MDMS per day	7	L-M-M	None to minimal harm to customer or organization for access to/disclosure of payload data	Inaccurate command parameters associated to a batch of meters may lead to an incorrect next workflow process execution that may lead to a partial rebuild of stored data or a reprocessing (eg re-billing) for that batch of meters	Not receiving the response payload to this command would create missing data for a batch of meters and would trigger an immediate retry or retry at next file transfer period to satisfy next workflow processing steps (eg billing)
bulk_Mtr-read_resp-data	MDMS sends several large files (batches) per day of Utility meter information to CIS/Billing - Utility	7	M-M-M	Serious harm to organization for not showing good stewardship (unauthorized access to/disclosure) of large amounts of meter payload data, with minimal to harm to customer for unauthorized access to/disclosure of payload data	Inaccurate positive command parameters associated to a batch of meters may lead to an incorrect next workflow process execution that may lead to a partial rebuild of stored data or a reprocessing (eg re-billing) for that batch of meters	Not receiving the payload would create missing data for a batch of meters and would trigger an immediate retry or retry at next file transfer period to satisfy next workflow processing steps (eg billing)
Mtr-read_data_resp-data	2-Way Meters - Water send meter read data to AMI Head-End. Meter is not a electric grid critical infrastructure component. This payload is not used primarily for disturbance analysis	13	M-M-L	Minimal harm to customer or organization for access to/disclosure of payload data as the payload data is tagged to a Meter ID not a customer account	Inaccurate payload data associated to a meter may lead to an incorrect data interpretation or next workflow process execution that may lead to a partial rebuild of stored data or a reprocessing (eg re-billing) for that meter, or customer taking incorrect action that if happens in-scale may lead to serious impact to customers or the organization	Not receiving the response payload to the command would create missing data for a meter and may trigger an immediate retry, which if fails again, may wait for next time periods send of meter read data and then processing for multiple time periods
Mtr-read_multi-interval-data_cmd	Operations e.g. MDMS actor sends command requesting a specific interval of meter consumption information for a specific period from 2-Way Meter (Electr or Gas). Meter is not a electric grid critical infrastructure component. This payload is not used primarily for disturbance analysis	13	M-M-L	Minimal harm to customer or organization for access to/disclosure of payload data as the payload data is tagged to a Meter ID not a customer account, but made lead to serious impact to Utility if in-scale	Inaccurate Meter ID, reading period and reading type can lead to billing errors and customer complaints leading to serious harm to utility (if in-scale)	Not receiving the payload would create missing meter data and would trigger an immediate retry or retry at next file transfer period to satisfy next workflow processing steps (eg billing)

Payload Name	Description	CSWG LICs	C-I-A	Confidentiality	Integrity	Availability
Mtr-read_multi-interval-data_resp-data	2-Way Meter (Electr or Gas) response including requested meter interval consumption information for a specific period. Meter is not a electric grid critical infrastructure component. This payload is not used primarily for disturbance analysis	13	M-M-L	Minimal harm to customer or organization for access to/disclosure of payload data as the payload data is tagged to a Meter ID not a customer account	Inaccurate payload data associated to a meter may lead to an incorrect data interpretation or next workflow process execution that may lead to a partial rebuild of stored data or a reprocessing (eg re-billing) for that meter, or customer taking incorrect action that if happens in-scale may lead to serious impact to customers or the organization	Not receiving the response payload to the command would create missing data for a meter and may trigger an immediate retry, which if fails again, may wait for next time periods send of meter read data and then processing for multiple time periods
on-demand_Mtr-read_cmd	CIS/Billing - Utility or IHD or Cust EMS sends command requesting adhoc consumption information from a single meter. Even though Meter is not a electric grid critical infrastructure component, this payload may be used in performing meter and telecomm network diagnostics.	13, 15, 18, 20	L-M-L	None to minimal harm to customer or organization for access to/disclosure of payload data	Inaccurate command parameters associated to a meter may lead to an incorrect data interpretation or next workflow process execution that may lead to a partial rebuild of stored data or a reprocessing (eg re-billing) for that meter, or customer taking incorrect action at the IHD or Custr EMS	Not receiving the response payload to the command would create missing data for a meter and may trigger an immediate retry, which if fails again may lead to customer frustration and/or complaint filed with jurisdiction
on-demand_Mtr-read_cmd_comm_err	IHD or Cust EMS or DAP or AMI Head-End sends message to MDMS, NMS, and/or CIS/Billing - Utility of issue with adhoc meter read request. Even though Meter is not a electric grid critical infrastructure component, this payload may be used in performing meter and telecomm network diagnostics.	13, 20	L-L-L	None to minimal harm to customer or organization for access to/disclosure of payload data	A false negative or false positive payload attributes associated to a specific meter may lead to an unnecessary health check of the meter and the telecomm network to the meter	Not receiving this payload to the command may lead to multiple repeated attempts to request the on-demand meter read, which may lead to a specific customers frustration and/or complaint filed with jurisdiction
on-demand_Mtr-read_cmd_err	Meter sends communication to IHD or Cust EMS or MDMS and NMS and/or CIS/Billing - Utility of issue with adhoc meter read request relating to metrology. Even though Meter is not a electric grid critical infrastructure component, this payload may be used in performing meter and telecomm network diagnostics.	13, 15, 18, 20	L-L-L	None to minimal harm to customer or organization for access to/disclosure of payload data	A false negative or false positive payload attributes associated to a specific meter may lead to an unnecessary health check of the meter and the associated application	Not receiving this payload to the command may lead to multiple repeated attempts to request the on-demand meter read, which may lead to a specific customers frustration and/or complaint filed with jurisdiction, or eventually to organization observing a broken meter read application

Payload Name	Description	CSWG LICs	C-I-A	Confidentiality	Integrity	Availability
on-demand_Mtr-read_resp-data	Meter sends communication of consumption information as requested from a adhoc meter read request to IHD or Cust EMS or MDMS and NMS and/or CIS/Billing - Utility. Even though Meter is not a electric grid critical infrastructure component, this payload may be used in performing meter and telecomm network diagnostics.	13, 15, 18, 20	L-M-L	Minimal harm to customer or organization for access to/disclosure of payload data as the payload data is tagged to a Meter ID not a customer account	Inaccurate payload data associated to a meter may lead to an incorrect data interpretation or next workflow process execution that may lead to a partial rebuild of stored data or a reprocessing (eg re-billing) for that meter, or customer taking incorrect action at the IHD or Custr EMS that if happens in scale may lead to sever impact to customers or the organization	Not receiving the response payload to the command would create missing data for a meter and may trigger an immediate retry, which if fails again may lead to customer frustration and/or complaint filed with jurisdiction

5.10.4 Scenarios

5.10.4.1 Scenario: On-Demand Meter Reading

Narrative

Meters, whether they are Electric, Gas or Water, are anticipated to have on-demand meter reading capability. In this scenario, the request on-demand_Mtr-read_cmd payload may originate from the CIS or the MDMS but can also originate from devices within the HAN. In any case, we expect the head end to receive on demand meter read request and forward the request to the Smart Meter via the DAP. The meters may be read on demand for purposes of backfilling missing information, customer interaction or move in and move out scenarios. Upon receiving the on demand read request, the meter shall respond with the on-demand_Mtr-read_resp-data payload.

NOTE: The How Often Column refers the reader to the requirements table due to the fact that this scenario is also used by other use cases (e.g. Pre-pay) and the how often is dependent upon how many use cases are considered.

Business Objectives

Payload Name	Payload Type	Payload Attributes	PAP02 Baseload (routine)	PAP02 Highload (full load)	Originating Actor	Destination Actor	Reliability	Latency	When	How Often	Payload Size
on-demand_Mtr-read_resp-data	resp-data	Meter ID, reading type, reading data	X	X	2-Way Meter - Electr,2-Way Meter - Gas,2-Way Meter - Water	CIS/Billing - Utility,IPD,Cust. EMS	> 98%	< 15 sec	7AM - 10PM	See REQMTS Table	100
on-demand_Mtr-read_cmd	cmd	Meter ID, reading type desired	X	X	CIS/Billing - Utility,IPD,Cust. EMS	2-Way Meter - Electr,2-Way Meter - Gas,2-Way Meter - Water	> 98%	< 15 sec,< 1 hr	7AM - 10PM	See REQMTS Table	25

5.10.4.2 Scenario: On-Demand Read Failure

Narrative

Meters, whether they are Electric, Gas or Water, are anticipated to have on-demand meter reading failures. In this scenario, the request may originate from the CIS or the MDMS. In any case, we expect the Meter on demand read request to fail and at each step of the process, if a failure occurs, the upstream devices shall send a notification of failure. Failure in this case can be defined as failure to communicate (on-demand_Mtr-read_cmd_comm_err) or an failure to read the actual meter (on-demand_Mtr-read_cmd_err).

NOTE: The How Often Column refers the reader to the requirements table due to the fact that this scenario is also used by other use cases (e.g. Pre-pay) and the how often is dependent upon how many use cases are considered.

Business Objectives

Payload Name	Payload Type	Payload Attributes	PAP02 Baseload (routine)	PAP02 Highload (full load)	Originating Actor	Destination Actor	Reliability	Latency	When	How Often	Payload Size
on-demand_Mtr-read_cmd_comm_err	comm-err	Meter ID, failure code, sending device ID	X	X	DAPjm,IPD,Cust. EMS,AMI Head-End(j),Cust. Browser - Premise,Cust. Browser - Mobile	CIS/Billing - Utility, MDMS, NMS,CIS/Billing - Utility, MDMS, NMS,Web Portal - Utility	> 99%,> 98%,> 99.5%	< 10 sec,< 30 sec,< 5 sec,< 15 sec	7AM - 10PM	See REQMTS Table	50
on-demand_Mtr-read_cmd_err	cmd-err	Meter ID, failure code,	X	X	2-Way Meter - Electr,2-Way Meter - Gas,2-Way Meter - Water	CIS/Billing - Utility, MDMS, NMS,Cust. EMS,IPD	> 98%	< 15 sec,< 5 sec	7AM - 10PM	See REQMTS Table	50

5.10.4.3 Scenario: Scheduled Meter Register Snap Shot collection

Narrative

Electric, Gas, Water utilities wish to obtain electric, gas or water consumption at least one time a day. This operation shall respond with a snap shot of the meters register taken at a time configured by the owner of the device. Typically, this snap shot of the register is taken at midnight and is used by a Validation, Estimation and Editing (VEE) process that validates metered intervals accumulated prior to the last snap shot.

Business Objectives

Payload Name	Payload Type	Payload Attributes	PAP02 Baseload (routine)	PAP02 Highload (full load)	Originating Actor	Destination Actor	Reliability	Latency	When	How Often	Payload Size
Mtr-read_data_resp-data	resp-data	device ID, reading period, reading type, reading data	X	X	2-Way Meter – Elec, 2-Way Meter – Gas, 2-Way Meter - Water	AMI Head-End(j)	98% success over 1 day, > 99.5% over 2 day	< 4 hr (expected window of data delivery)	24x7	1 per | ElecMtr per | day 1 per | GasMtr per | day 1 per | WaterMtr per | day	200

5.10.4.4 Scenario: Scheduled Meter Interval reads

Narrative

Electric, Gas, Water utilities wish to obtain electric, gas or water consumption data four to six times a day. During these four to six operations per day, the operation shall obtain interval usage information varying from 15 minutes to 1 hour in duration since the last successful bulk read operation. This scenario includes Residential, Commercial and Industrial meters.

Reliability NOTE: The reliability for the response payload is written with the expectation that > 90% of the Originating actor's payloads are captured every 4-6 hours, > 98% of the Originating Actors payloads are captured at least once in a 24 hour period and > 99.5% of the payloads are captured at least once in 2 days for residential Electric Meters. For Commercial and Industrial Electric meters, > 98% of the response payloads are captured every 2 hours and > 99.5% of the response payloads shall be captured at least once over 2 days. The reliability requirements for gas and water meters are different. Please see the requirements spreadsheet for more information.

PAYLOAD SIZE NOTE: The size of the payload is dependent upon how many readings are being collected from the meter at any given time. The number of measurements made by the meter per day may vary along with how often the measurements are collected. An example calculation for how the response payload would work in real life is as follows.

Payload Size = 24 hours / How Often X 400 bytes

LATENCY NOTE: The latency requirements are relaxed for gas and water meters. Please see the requirements spreadsheet for more information.

NOTE: Depending, on the design philosophy of particular solution, the MTR-read_multi-interval-data_cmd may be used to poll the Mtr-read_multi-interval-data_resp-data payload. In a push/bubble up architecture, only the MTR-read_multi-interval-data_cmd payload is used.

Business Objectives

Payload Name	Payload Type	Payload Attributes	PAP02 Baseload (routine)	PAP02 Highload (full load)	Originating Actor	Destination Actor	Reliability	Latency	When	How Often	Payload Size

Payload Name	Payload Type	Payload Attributes	PAP02 Baseload (routine)	PAP02 Highload (full load)	Originating Actor	Destination Actor	Reliability	Latency	When	How Often	Payload Size
Mtr-read_multi-interval-data_cmd	cmd	device ID, period of time to be reported, reading type	X	X	MDMS	2-Way Meter - Electr,2-Way Meter - Gas	> 98%	< 15 sec,< 1 hr	7AM - 6PM	25 per 1000 per | ElectrMtr per | day,25 per 1000 per | GasMtr per | day	25
Mtr-read_multi-interval-data_resp-data	resp-data	device ID, reading period, reading type, reading data	X	X	2-Way Meter - Gas C/I,2-Way Meter - Gas Resdnt,2-Way Meter - Electr C/I,2-Way Meter - Electr Resdnt	AMI Head-End(j),MDMS	90% success every 4-6 hr, 98% success over 1 day, > 99.5% over 2 day,> 98% success every 2 hr, > 99.5% success over 2 day, > 99.5% over 2 day	< 4 hr (expected window of data delivery), < 2 hr (expected window of data delivery), < 15 sec	24x7,7 AM - 6PM	1-6 per | GasC/IMtr per | day (may have 15 min vs 1hr interval data),1-6 per | GasResdntMtr per | day (with 4hr -24h interval data),12-24 per | ElectrC/IMtr per | day (Intervals of 15 min to 1hr, 4-20 data points per interval),4-6 per | ElectrResdIMtr per | day (Intervals of 15 min to 1hr, 4-8 data points per interval),25 per 1000 per | ElectrMtr per | day,25 per 1000 per | GasMtr per | day	1600 for 4hr of data - 2400 for 6hr of data,200 for 1hr interval 4 pts every hr - 1600 for 15 min interval 20 pts for 2 hr of data,200 - 2400

5.10.4.5 Scenario: Bulk transfer of meter read information in the enterprise

Narrative

Depending on how the Meter reading system is architected. A large bulk meter request bulk_Mtr-read_cmd payload will be made from the CIS/Billing-Utility actor or MDMS within an Utility Enterprise. The response bulk_Mtr-read_resp-data payload will include Meter Reading information from Scheduled Meter Register Reads, Scheduled Meter Interval Reads or information from On-Demand read requests.

Business Objectives

Payload Name	Payload Type	Payload Attributes	PAP02 Baseload (routine)	PAP02 Highload (full load)	Originating Actor	Destination Actor	Reliability	Latency	When	How Often	Payload Size
bulk_Mtr-read_cmd	cmd	group(cycle)ID, data-elements-groups, data-date	X	X	CIS/Billing - Utility,MDMS	MDMS,AMI Head-End(j)	> 99.5%	< 1 hr	6PM - 6AM	x per | Utl per | day (batches of y Mtrs)	25
bulk_Mtr-read_resp-data	resp-data	group(cycle)ID, data-elements-group ID (e.g. Meter ID, Register Readings, Interval Data, program-opt-outs, Voltage), data-date,	X	X	MDMS,AMI Head-End(j)	CIS/Billing - Utility,MDMS	> 99.5%	< 1 hr	6PM - 6AM	x per | Utl per | day (batches of y Mtrs)	xMB

5.11 Meter System Events

5.11.1 Overview

The following section identifies network requirements for enabling and processing system events and use cases associated with the Smart Grid. This document does not address, establish or recommend any security requirements or supporting architectures needed for the Smart Grid. Smart Grid security is being addressed in detail by other functioning task forces within the OpenSG and the UCAIUG. The intent is to establish a straw man set of requirements to be incorporated into the overall Smart Grid network design for addressing security communication requirements.

Below is an example architecture showing the Domains, Actors, and Interfaces used in this use case.

5.11.1.1 Reference Architecture with Domains, Actors and Interfaces

Smart Grid Conceptual Actors / Data Flow Diagram – Cross Domain Network Focused – OpenSG / SG-Network TF

Meter Events Use Case

DRAFT 14Feb2012
Base – file SG-NET-diagram-r5.1.vsd
page size: ANSI-D

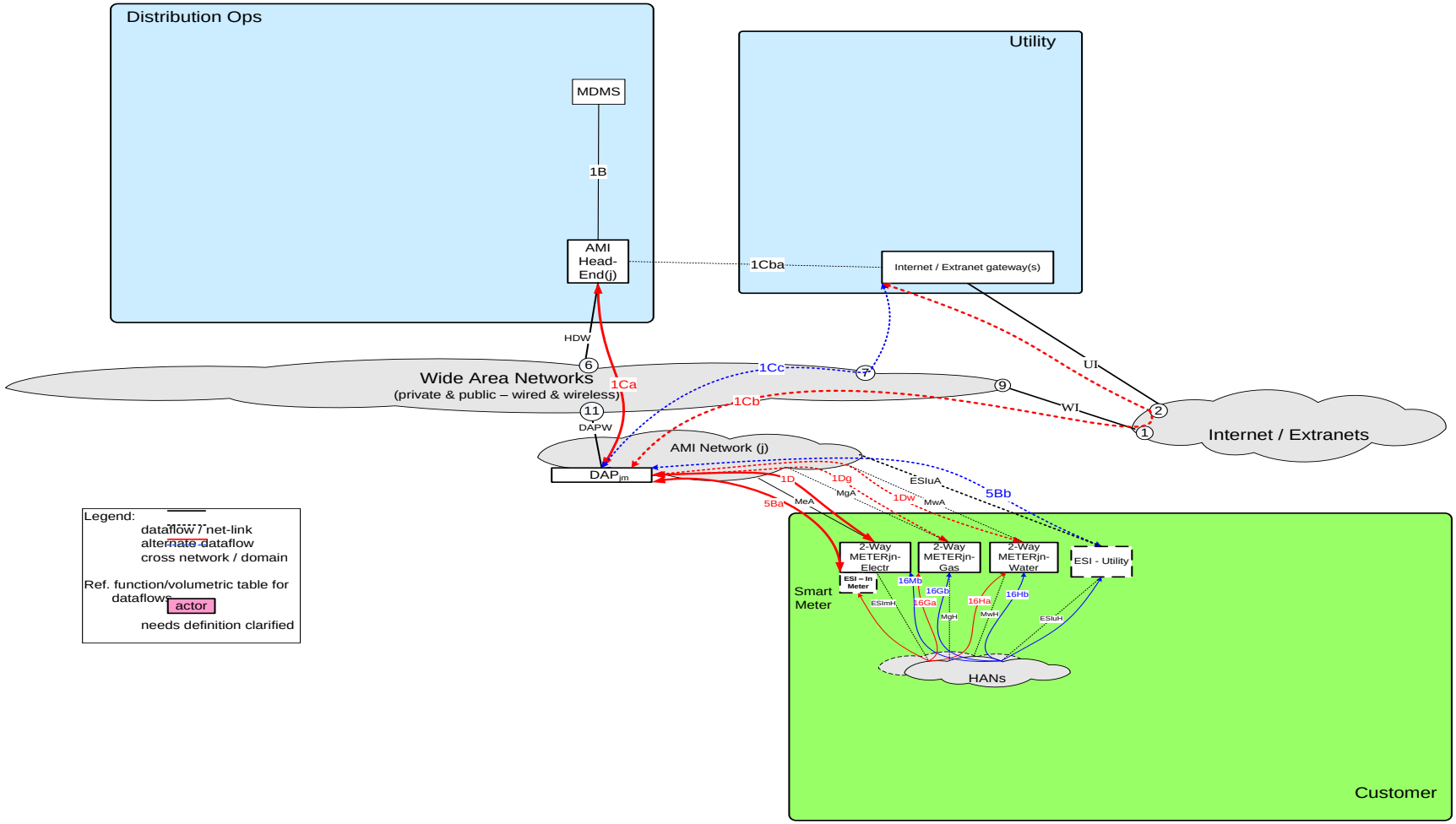

5.11.1.2 Possible Telecommunications Paths

CIS / Billing - Utility <-> Meter – 2way (no ESI) Communication Path Options

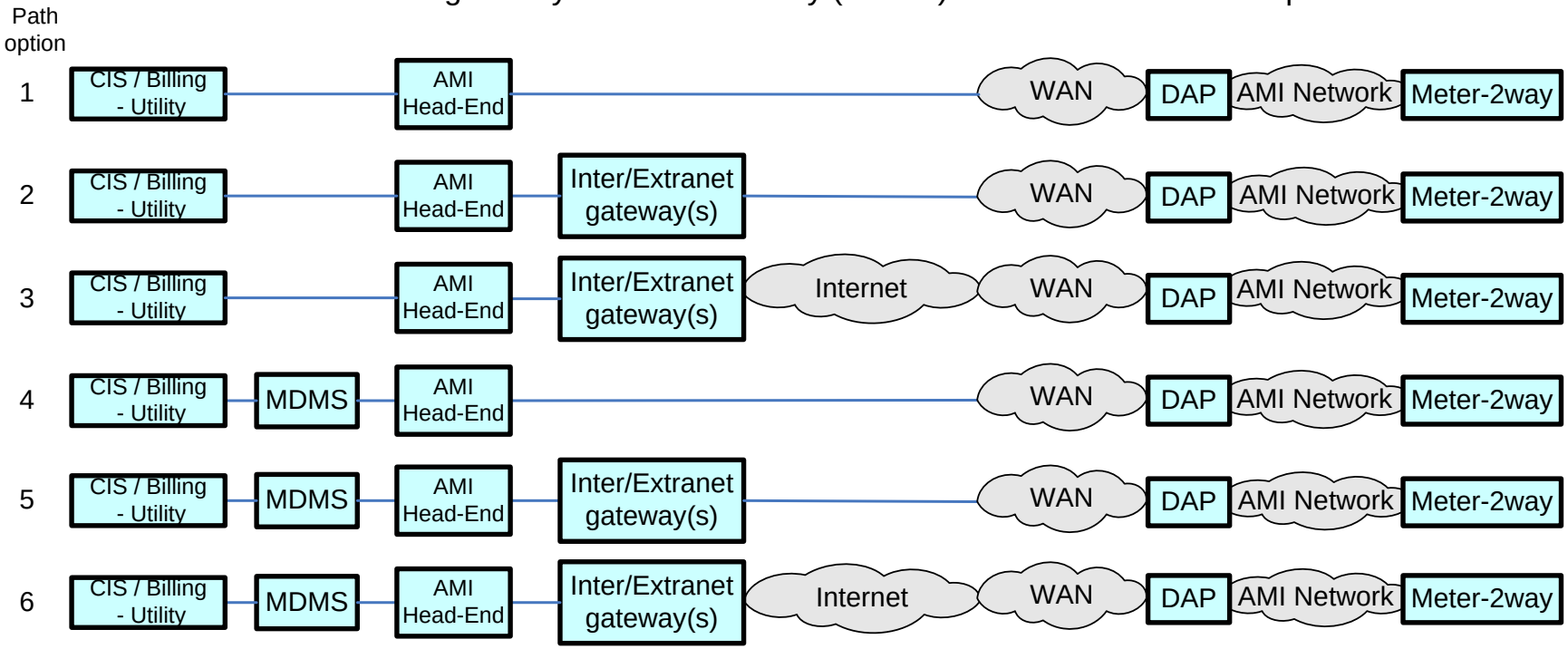

CIS / Billing - Utility <-> Meter-2Way (via ESI) Communication Path Options

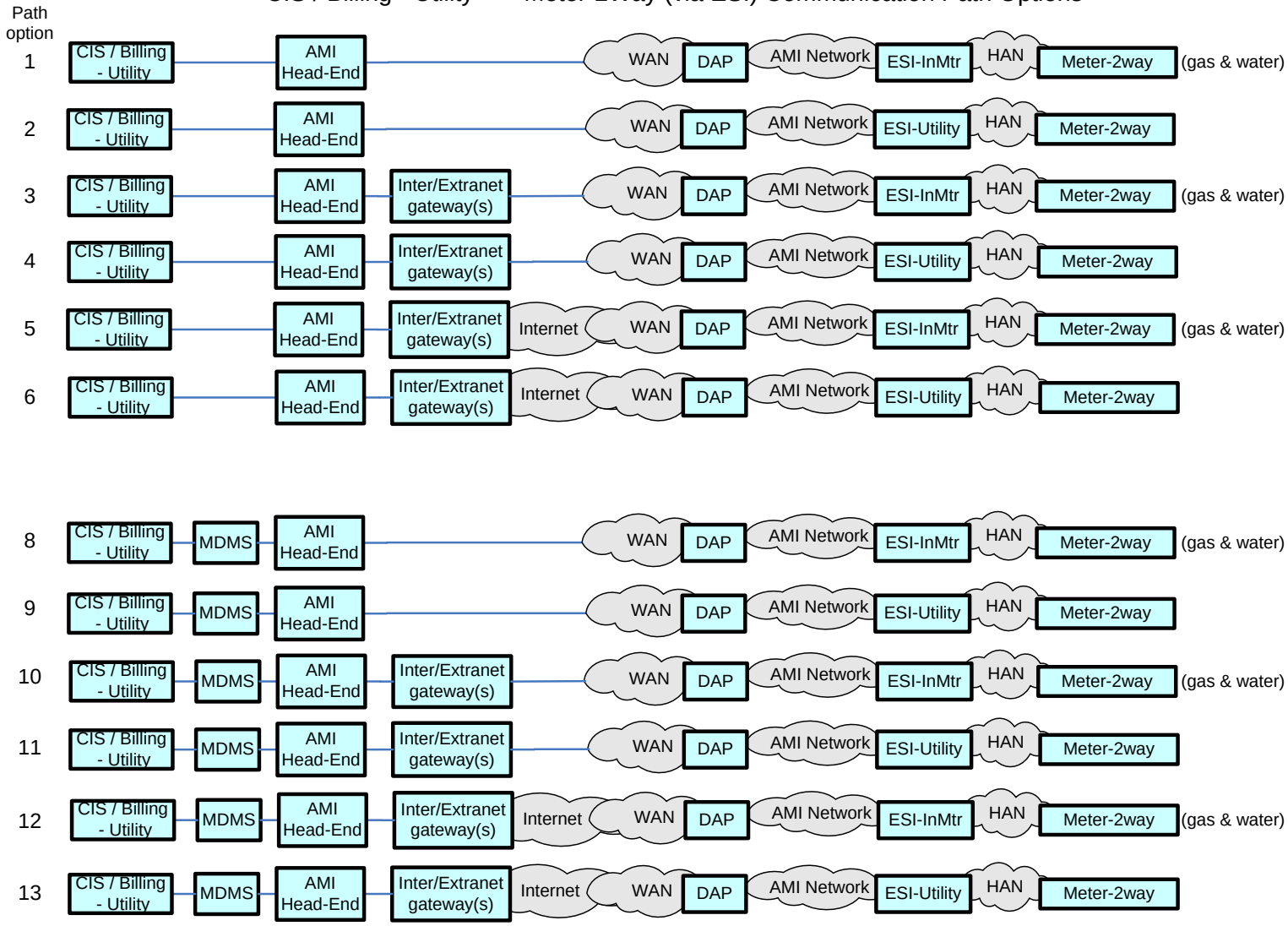

5.11.2 Actors

Actor	Description
AMI Head-End(j)	The AMI head end is responsible for the operation and coordination of AMI system components. It represents the central nervous system of the AMI system.
CIS/Billing - Utility	A utility billing system used for reconciling customer payments for electricity usage. This system may also be used for managing vendors of electricity generation.
DAPjm	This is the Data Aggregation Point on the NAN. It is essentially the point of convergence for all communication between SG devices and utility back office systems. In this specific use case it provides a communication conduit for AMI Smart Meters.
ESI - In Meter	An ESI, owned by the Utility and resides in the Utility meter, which enables secure interactions between HAN Devices Registered on its network and the Utility AMI.
ESI - Utility	An ESI, owned by the Utility, which enables secure interactions between HAN Devices Registered on its network and the Utility AMI. The Utility ESI functionality may reside in the Customer EMS or customer broadband router.
Internet / Extranet gateway(s) - Utility	These are gateways used to connect internal utility networks with external networks.
MDMS	The application responsible for the collection and retrieval of all relevant customer information for purposes of billing and facilitating interaction.

5.11.3 Applicable Payload Information

Payload Name	Description	CSWG LICs	C-I-A	Confidentiality	Integrity	Availability
Audit_Application_Event	Meter sends Meter event to Operations actor e.g. MDMS, occurs when a preconfigured criteria is met e.g. a) failure or exception in an execution of an application or out of band/bounds condition; b) not able to service request or request timed out; c) system activity	13	L-M-M	None to minimal harm to customer or organization for access to/disclosure of payload data	A false negative or false positive alert code associated to a specific meter may lead to an incorrect next workflow process execution that may lead to serious effect on safe reliable operation of the meter	Not receiving this payload from a specific meter might lead to lead to an inappropriate action/operation being taken that may have a serious effect on safe reliable electric operation of the meter
Configuration_Event	Meter sends message meter indicating configuration has changed for that device e.g. out-of-state condition with configuration; get / set config, config errors	13	L-H-H	None to minimal harm to customer or organization for access to/disclosure of payload data	A false negative or false positive alarm code associated to a specific meter may lead to an incorrect next workflow process execution that may lead to severe or catastrophic impact on safe reliable economic operation of the meter (if in-scale)	Not receiving this payload from a specific meter might lead to an inappropriate action/operation being taken that may have a severe or catastrophic impact on safe reliable economic operation of the meter (if in-scale)
Fault_Error_Alarm_Event	Meter sends message to Operations e.g. MDMS, indicating an alarm condition has occurred e.g. out of predefined state or passed threshold conditions; System failure (e.g. Register), measurement failure, Service switch, system restart counts (outages), low battery, buggy software, firmware update failure, Communication errors, System memory full, system memory fail	13	L-M-M	None to minimal harm to customer or organization for access to/disclosure of payload data	A false negative or false positive alarm code associated to a specific meter may lead to an incorrect next workflow process execution that may lead to serious effect on safe reliable operation of the meter	Not receiving this payload from a specific meter might lead to lead to an inappropriate action/operation being taken that may have a serious effect on safe reliable electric operation of the meter
Power_Quality_Event	Meter sends to MDMS any number of Power Quality alerts/alarms e.g. out-of-state or passed threshold conditions e.g. leading/lagging power, voltage fluctuations, imbalance in energy flow, harmonics, sags, swells	13	M-H-H	Minimal to sever harm to organization for not showing good stewardship (unauthorized access to/disclosure) of customer meter and electrical characteristics data	A false negative or false positive alarm code associated to a specific meter may lead to an incorrect next workflow process execution that may lead to serious to catastrophic effect on safe reliable operation of the meter or associated meter's circuit	Not receiving this payload from a specific meter might lead to lead to an inappropriate action/operation being taken that may have a serious to catastrophic effect on safe reliable electric operation of the meter or associated meter's circuit

Payload Name	Description	CSWG LICs	C-I-A	Confidentiality	Integrity	Availability
Security_Event	Meter sends notification to Operations e.g. MDMS actor of a possible security breach or related event Tamper / tilt, bad credentials, abnormal activity reporting, Denial of service, Meter inversion, Cover removal	13, 22	M-H-H	Minimal to server harm to organization or Customer for not showing good stewardship (unauthorized access to/disclosure) of customer meter security and operation data	A false negative or false positive alarm code associated to a specific meter may lead to an incorrect next workflow process execution that may lead to serious to catastrophic effect on safe reliable operation of the meter or false claim against customer	Not receiving this payload from a specific meter might lead to lead to an inappropriate action/operation being taken that may have a serious to catastrophic effect on safe reliable electric operation of the meter or false claim against customer

5.11.4 Scenarios

5.11.4.1 Scenario: Audit Event

Narrative

In this scenario, the meter whether it is electric, gas or water sends application level audit information in the Audit_Application_Event payload based upon configured parameters. Examples of these parameters include but are not limited to:

- logged failure or exception in an execution of an application or out of band/bound condition
- logged service request or request timed out
- logged system activity

Business Objectives

Payload Name	Payload Type	Payload Attributes	PAP02 Baseload (routine)	PAP02 Highload (full load)	Originating Actor	Destination Actor	Reliability	Latency	When	How Often	Payload Size
Audit_Application_Event	alert	Meter ID, event type/Code	X	X	2-Way Meter - Electr,2-Way Meter - Gas,2-Way Meter - Water	MDMS	> 98%	< 4 min	24x7	1 per 1000 per | ElectrMtr per | month,1 per 1000 per | GasMtr per | month,1 per 1000 per | WaterMtr per | month	25 - 278

5.11.4.2 Scenario: Configuration Event

Narrative

In this scenario, the meter whether it is electric, gas or water sends application level alarm information in the Configuration_Event payload indicating that configuration has changed for that device. Examples of these alarms include but are not limited to:

- out-of-state condition with configuration (e.g. electric meter pulse multiplier configured incorrectly)
- configuration errors (e.g. cannot get or set a configuration item)

Business Objectives

Payload Name	Payload Type	Payload Attributes	PAP02 Baseload (routine)	PAP02 Highload (full load)	Originating Actor	Destination Actor	Reliability	Latency	When	How Often	Payload Size
Configuration_Event	alarm	Meter ID, acknowledgement code	0	X	2-Way Meter - Electr,2-Way Meter - Gas,2-Way Meter - Water	MDMS	> 98%	< 2 min,< 4 min	24x7	1 per 1000 per | ElectrMtr per | month,1 per 1000 per | GasMtr per | month,1 per 1000 per | WaterMtr per | month	25 - 278

5.11.4.3 Scenario: Fault Error Alarm Event

Narrative

In this scenario, the Meter whether it is electric, gas or water sends the Fault_Error_Alarm_Event payload indicating an fault condition has occurred. Examples of fault include but are not limited to:

- out of predefined state or passed threshold conditions
- System failure (e.g. Register)
- measurement failure
- Service switch
- system restart counts (outages)
- low battery
- System memory full

Business Objectives

Payload Name	Payload Type	Payload Attributes	PAP02 Baseload (routine)	PAP02 Highload (full load)	Originating Actor	Destination Actor	Reliability	Latency	When	How Often	Payload Size
Fault_Error_Alarm_Event	alarm	Meter ID, alarm code	X	X	2-Way Meter - Electr,2-Way Meter - Gas,2-Way Meter - Water	MDMS	> 98%	< 2 min	24x7	4 per 1000 per | ElectrMtr per | month,1 per 1000 per | GasMtr per | month,1 per 1000 per | WaterMtr per | month	25 - 278

The objective is to collect alarms from the meter that occur when there is an out of state or passed a threshold condition on the meter. The communication of the event information is triggered locally on the meter in response to reaching a pre defined condition. The metric to judge the state or condition are locally store on the meter device.

5.11.4.4 Scenario: Power Quality Event

Narrative

The objective is to collect alarms from the meter that occur when there is a out of state or passed a threshold condition on the meter. Power quality event are disturbance oriented by nature, leading / lagging power. In most cases the events will be as result of excessive steady state voltage variation, unbalance in energy flow, harmonics on the line, sags, swells, oscillatory.

In this scenario an Electric Meter sends the Power_Quality_Event payload when Power Quality alarms occur. Examples of Power Quality alarms include but are not limited to:

- out-of-state or passed threshold conditions
  - leading/lagging power
  - voltage fluctuations
  - imbalance in energy flow
  - harmonics
  - voltage sags and swells

Business Objectives

Payload Name	Payload Type	Payload Attributes	PAP02 Baseload (routine)	PAP02 Highload (full load)	Originating Actor	Destination Actor	Reliability	Latency	When	How Often	Payload Size
Power_Quality_Event	alarm	Meter ID, alarm code	X	X	2-Way Meter - Electr	MDMS	> 98%	< 2 min	24x7	4 per 1000 per | ElectrMtr per | month	25 - 278

5.11.4.5 Scenario: Security Events

Narrative

In this scenario, the Meter whether it is electric, gas or water sends the Security_Event payload when a security event occurs. Security Events include but are not limited to:

- meter cover removal / inversion / tamper / tilt detection
- bad user credentials
- abnormal activity reporting
- denial of service

Business Objectives

Payload Name	Payload Type	Payload Attributes	PAP02 Baseload (routine)	PAP02 Highload (full load)	Originating Actor	Destination Actor	Reliability	Latency	When	How Often	Payload Size
Security_Event	alarm	Meter ID, alarm code	X	X	2-Way Meter - Electr,2-Way Meter - Gas,2-Way Meter - Water	MDMS	> 98%	< 2 min	24x7	4 per 1000 per | ElectrMtr per | month,1 per 1000 per | GasMtr per | month,1 per 1000 per | WaterMtr per | month	25 - 278

Outage and Restoration Management

5.11.5 Overview of Business Processes

The following sections outline business use cases for Outage and Restoral Management. This management pertains to many forms of information that is exchanged between the communication actors.

The implementations of these use cases, and their accompanying requirements, will vary from utility to utility. Some examples of factors that will cause variations are:

Environmental (Earthquake/creep, Weather, Seasonal, Topography, etc)

Demographic (Residential, Industrial, etc)

The author's intent is to capture the numerous use case requirements across the communication actors in the scope of the management of this information. The intent is to reflect which use cases can be applied to different aspects of the Utility/Customer.

5.11.5.1 Reference Architecture with Domains, Actors and Interfaces

Smart Grid Conceptual Actors / Data Flow Diagram – Cross Domain Network Focused – OpenSG / SG-Network TF

Outage Restoration Management Use Case

DRAFT 14Feb2012
Base – file SG-NET-diagram-r5.1.vsd
page size: ANSI-D

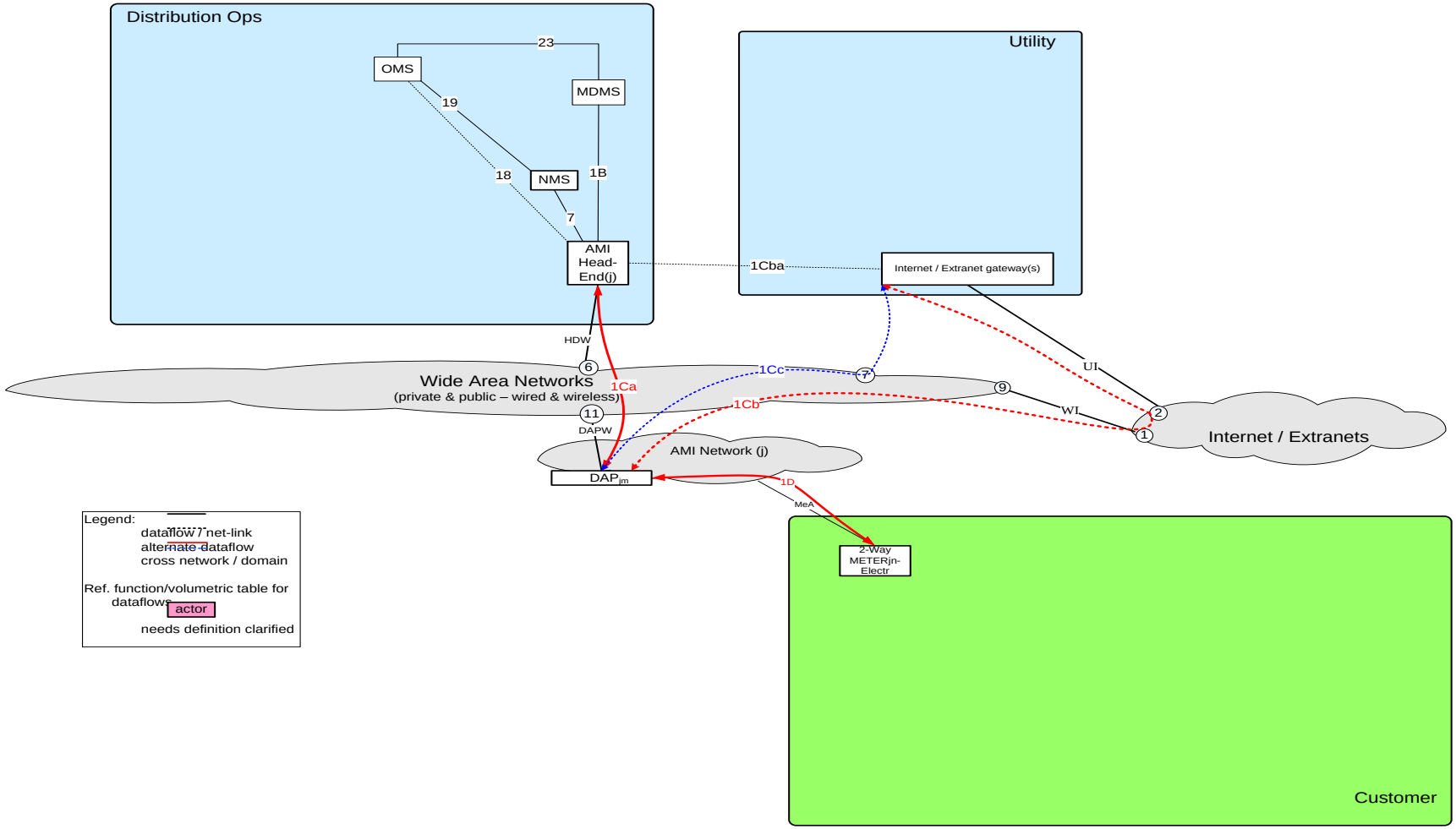

5.11.5.2 Possible communication paths

CIS / Billing - Utility <-> 2Way-Meter (no ESI) Communication Path Options

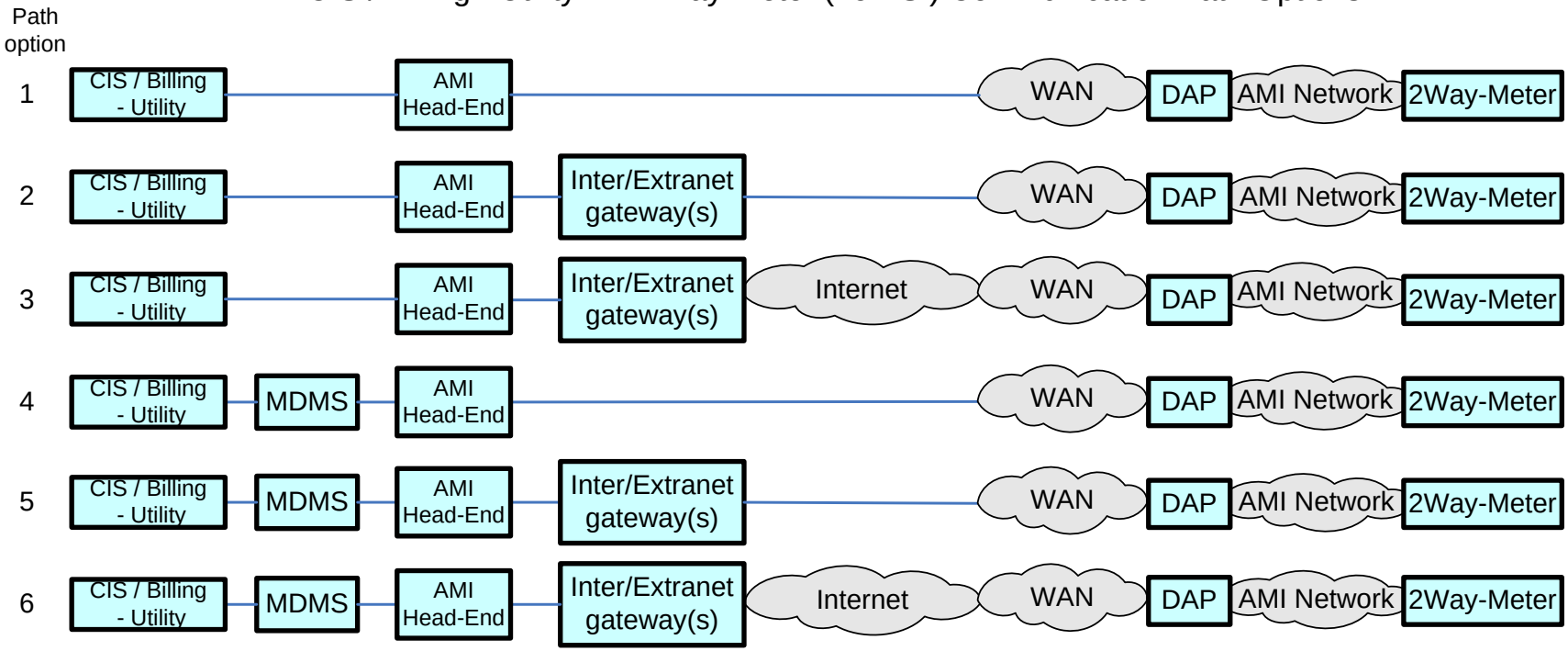

5.11.6 Actors

Actor	Description
AMI Head-End(j)	The AMI head end is responsible for the operation and coordination of AMI system components. It represents the central nervous system of the AMI system.
DAPjm	This is the Data Aggregation Point on the NAN. It is essentially the point of convergence for all communication between SG devices and utility back office systems. In this specific use case it provides a communication conduit for AMI Smart Meters.
Internet / Extranet gateway(s) - Utility	These are gateways used to connect internal utility networks with external networks.
MDMS	The application responsible for the collection and retrieval of all relevant customer information for purposes of billing and facilitating interaction.
NMS	A system or series of systems that are utilized to operate and manage utility assets that interact on any given network. These assets are comprised of both hardware and software components that require ongoing monitoring and management.
OMS	A system that receives power system outage notifications and correlates the geographic location of the power outage

5.11.7 Applicable Payload Information

Payload Name	Description	CSWG LICs	C-I-A	Confidentiality	Integrity	Availability
batt_pwr_notification	Indication that network or end-point device is running solely on battery power. [this payload only documented for the DAP, as the network and feeder devices with batteriers, the corresponding messages is accounted for in the device change of state messages]	13, 20	L-L-L	None to minimal harm to customer or organization for access to/disclosure of payload data	A false negative or false positive payload attributes associated to a specific device may lead to an unnecessary health check of the device	Not receiving this payload from a specific device may lead to device becoming unavailable for it's intended role when battery power is drained, at which point lose of communication with device would eventually be detected
otg_ntf_evnt_data	The communication from a device notifying the utility of a loss of power.	11, 12	L-L-L	None to minimal harm to customer or organization for access to/disclosure of payload data	A false negative or false positive payload attributes associated to a specific device may lead to an unnecessary health check of the device	Not receiving this payload from a specific device may lead to not having accurate information about where the electrical system outage occurred Due to this payload originating from a device that is experiencing the outage, these messages may not be successfully sent due to a broadcast sent from the device along with other devices that are affected
svc_rst_ntf_evnt_data	Meter sends communication to Operations e.g. OMS actor of Meter metrology detecting power restoration.	13	L-L-L	None to minimal harm to customer or organization for access to/disclosure of payload data	A false negative or false positive payload attributes associated to a specific device may lead to an unnecessary health check of the device	Not receiving this payload from a specific device may lead to the utility not knowing with certainty if an any "nested" outages still exist after a major outage

5.11.8 Scenarios

5.11.8.1 Scenario: Electric Meter encounters loss of mains power

Narrative

When an Electric Meter loses mains power the otg_ntg_evnt_data payload shall be sent to the OMS. The reliability requirement for this payload is generally more relaxed as electric service outages grow larger. However, Utilities wish to collect as many of these events as possible for accuracy with the OMS outage triage processes.

Business Objectives

Payload Name	Payload Type	Payload Attributes	PAP02 Baseload (routine)	PAP02 Highload (full load)	Originating Actor	Destination Actor	Reliability	Latency	When	How Often	Payload Size
otg_ntf_evnt_data	alarm	device ID, event code	X	X	2-Way Meter - Electr	OMS	> 30% large outage, > xx% small outage	< 20 sec	24x7	1 per | ElectrMtr per | lost-power-event	25

5.11.8.2 Scenario: Device sends notification that it is on battery backup

Narrative

In this scenario, a device that has battery backup lost power and notifies the AMI system with the batt_pwr_notification. The original intent with this payload that the actor of origination would be the DAP, however other devices may be capable of sending this payload.

Business Objectives

Payload Name	Payload Type	Payload Attributes	PAP02 Baseload (routine)	PAP02 Highload (full load)	Originating Actor	Destination Actor	Reliability	Latency	When	How Often	Payload Size
batt_pwr_notification	alarm	Device ID, status of mains power	X	X	DAPjm	OMS	> 99%	< 5 sec	24x7	20 per 1000 per | DAPjm per | system power outage event per day	25

5.11.8.3 Scenario: Electric Meter detects that mains power has been restored

Narrative

In this scenario, the Electric Meter notifies the AMI System (OMS) with the svc_rst_ntf_event_data that mains power has been restored. This payload may be used by other actors within the distribution network (e.g. DAP, Distribution Feeder device) for the same purposes. The authors of this document wish to bring attention to the latency requirements. For detecting nested outages, receiving this payload quickly can assist the OMS with helping determine of secondary outages exist within the vicinity of the dispatched field crews.

Business Objectives

Payload Name	Payload Type	Payload Attributes	PAP02 Baseload (routine)	PAP02 Highload (full load)	Originating Actor	Destination Actor	Reliability	Latency	When	How Often	Payload Size
svc_rst_ntf_evnt_data	alert	device ID, alert code	X	X	2-Way Meter - Electr	OMS	> 98%	< 20 sec	24x7	1 per | ElectrMtr per | power-returned-event	25

5.12 Premises Network Administration

5.12.1 Overview

Premises/Home Area Network Administration consists of the following scenarios. Note the acronym HAN and PAN are used interchangeably.

- Device Joins the Network
- Device Fails to Join the Network
- Device Un-Joins the Network
- Device Fails to Un-Join the Network

5.12.1.1 Reference Architecture with Domains, Actors and Interfaces

Smart Grid Conceptual Actors / Data Flow Diagram – Cross Domain Network Focused – OpenSG / SG-Network TF

Premise Network Admin Use Case

DRAFT 14Feb2012
Base – file SG-NET-diagram-r5.1.vsd
page size: ANSI-D

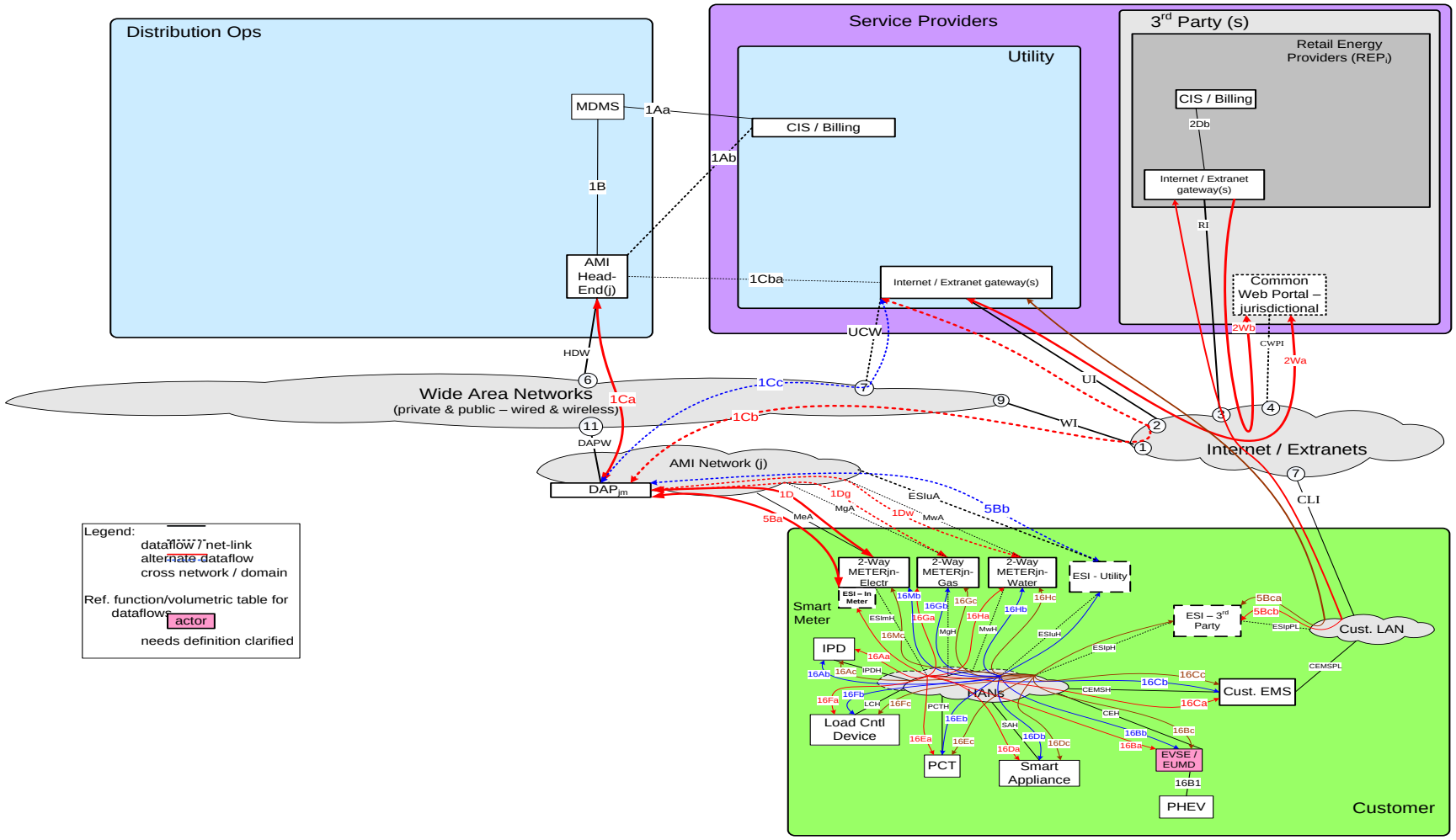

5.12.1.2 Possible communication paths

CIS / Billing - Utility <-> Meter – 2way (no ESI) Communication Path Options

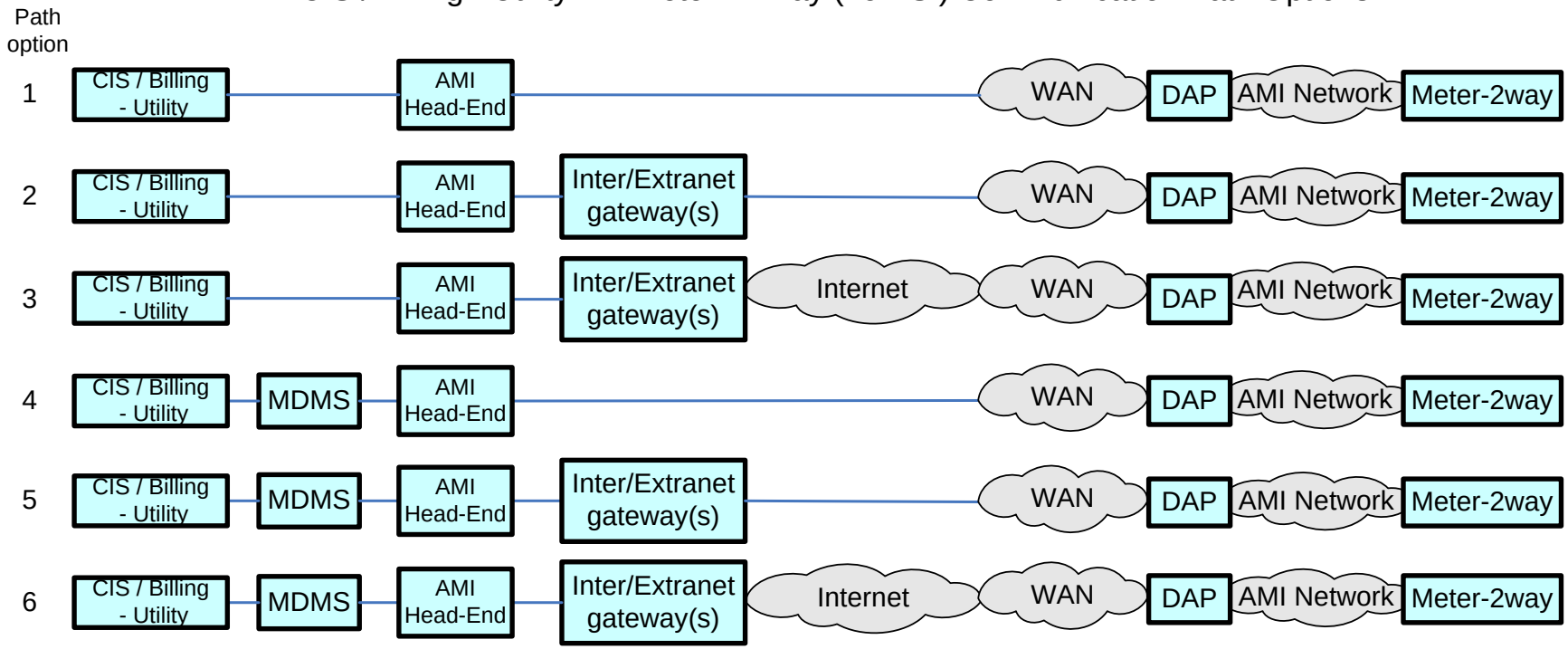

CIS / Billing - Utility <-> Meter-2Way (via ESI) Communication Path Options

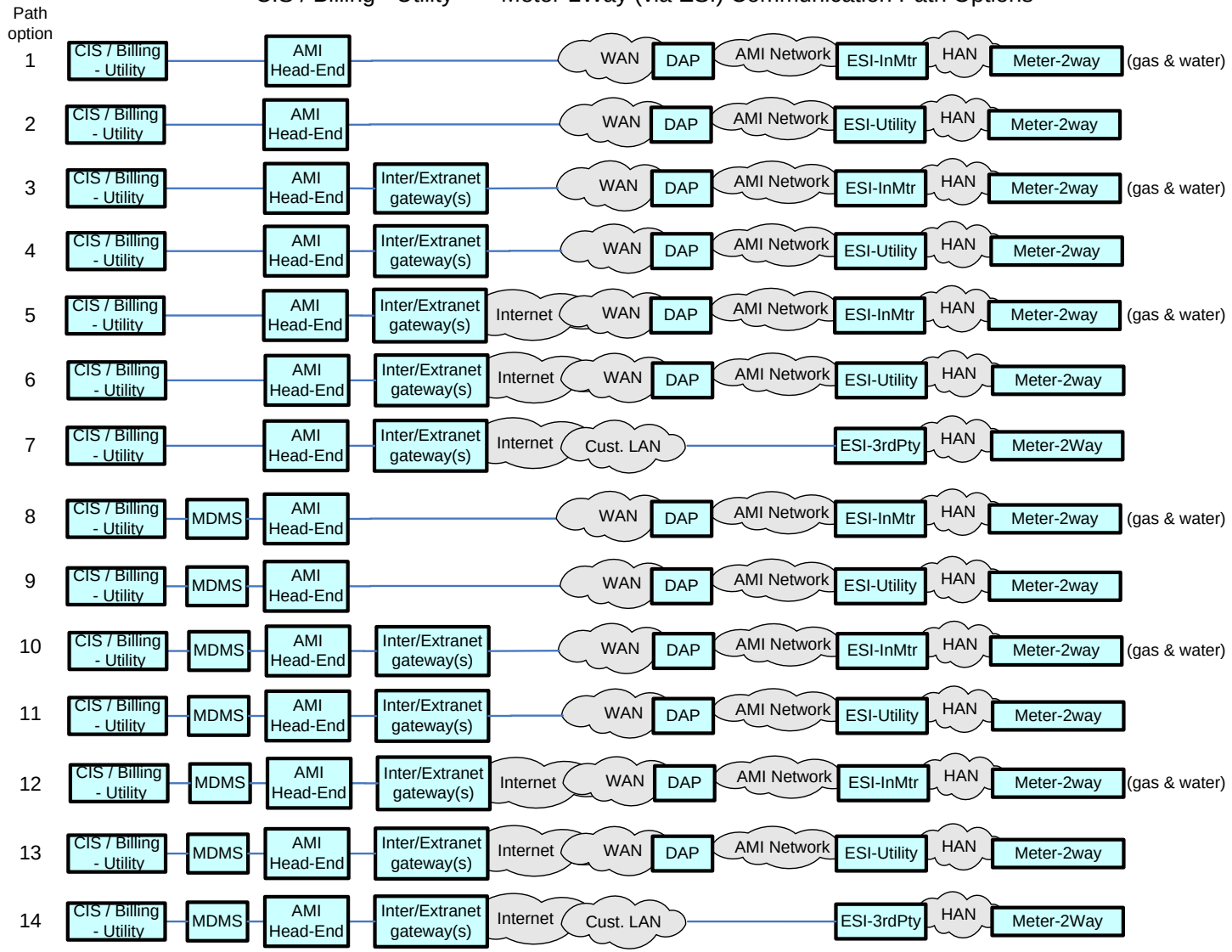

1818

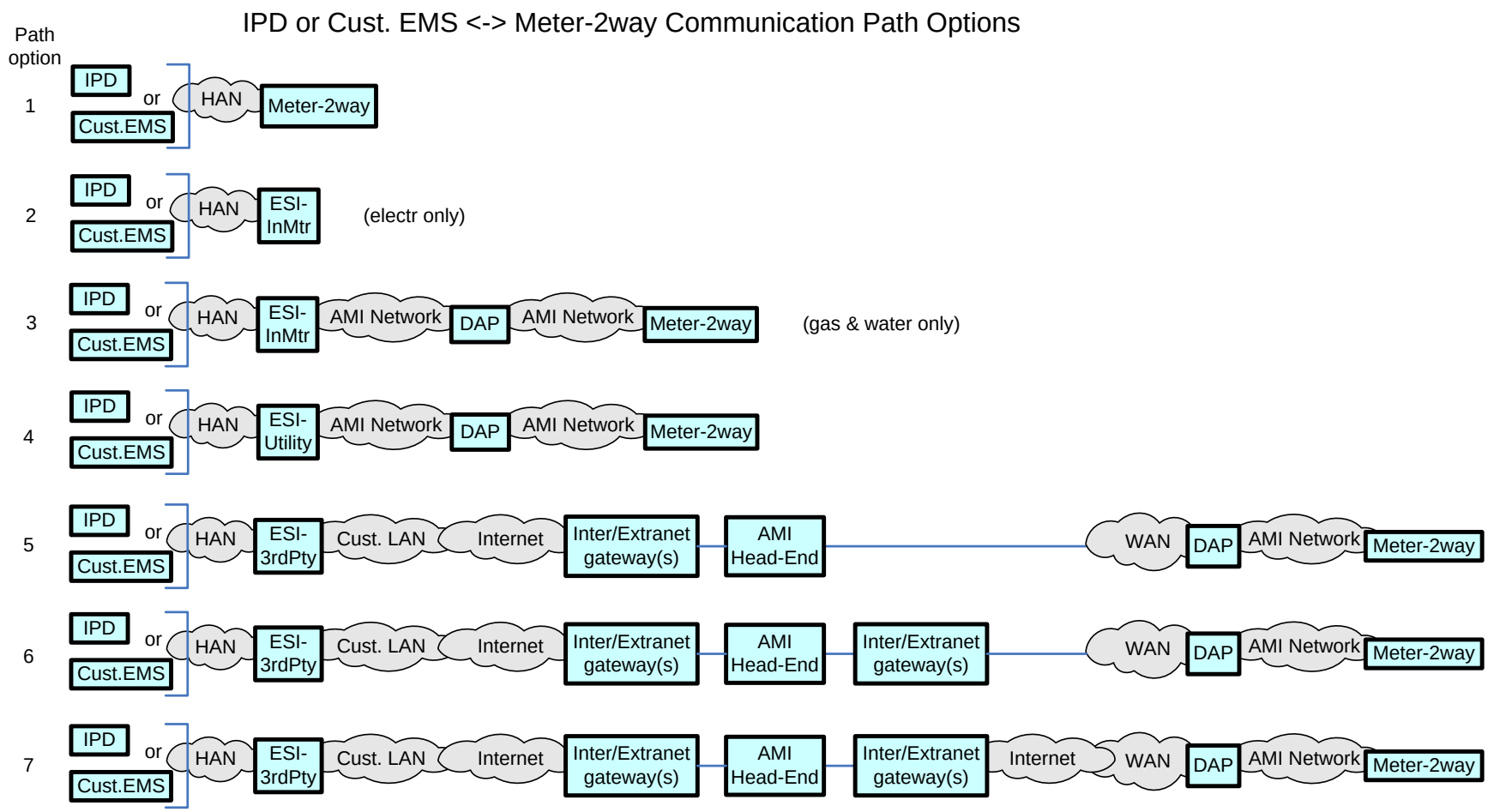
IPD or Cust. EMS <-> Meter-2way Communication Path Options
Path option
1
IPD
or
Cust.EMS
HAN
Meter-2way
2
IPD
or
Cust.EMS
HAN
ESI-InMtr
(electr only)
3
IPD
or
Cust.EMS
HAN
ESI-InMtr
AMI Network
DAP
AMI Network
Meter-2way
(gas & water only)
4
IPD
or
Cust.EMS
HAN
ESI-Utility
AMI Network
DAP
AMI Network
Meter-2way
5
IPD
or
Cust.EMS
HAN
ESI-3rdPty
Cust. LAN
Internet
Inter/Extranet gateway(s)
AMI Head-End
WAN
DAP
AMI Network
Meter-2way
6
IPD
or
Cust.EMS
HAN
ESI-3rdPty
Cust. LAN
Internet
Inter/Extranet gateway(s)
AMI Head-End
Inter/Extranet gateway(s)
WAN
DAP
AMI Network
Meter-2way
7
IPD
or
Cust.EMS
HAN
ESI-3rdPty
Cust. LAN
Internet
Inter/Extranet gateway(s)
AMI Head-End
Inter/Extranet gateway(s)
Internet
WAN
DAP
AMI Network
Meter-2way

5.12.2 Actors

Actor	Description
2-Way Meter – Electr	A bi-directional communication device used to perform measurement of electrical energy usage for residential use.
2-Way Meter – Gas	A bi-directional communication device used to perform measurement of gas consumption for residential use.
2-Way Meter – Water	A bi-directional communication device used to perform measurement of water consumption for residential use.
AMI Head-End(j)	The AMI head end is responsible for the operation and coordination of AMI system components. It represents the central nervous system of the AMI system.
CIS/Billing – REPi	A third party billing system used for reconcilling customer payments for electricity usage. This system may also be used for managing vendors of electricity generation.
CIS/Billing – Utility	A utility billing system used for reconcilling customer payments for electricity usage. This system may also be used for managing vendors of electricity generation.
Common Web Portal	Web interface for Regional Transmission Operator, customers, retail electric providers and transmission/distribution service provider to function as a clearing house for energy information.
Cust. EMS	A customer owned energy management system used to manage energy with a premises.
DAPjm	This is the Data Aggregation Point on the NAN. It is essentially the point of convergence for all communication between SG devices and utility back office systems. In this specific use case it provides a communication conduit for AMI Smart Meters.
ESI - 3rd Party	An ESI, owned by the Customer and not provided by the Utility, which enables secure interactions between HAN Devices Registered on its network and the service provider e.g. REP. The 3rd Party ESI functionality may reside in the Customer EMS or customer's
ESI - In Meter	An ESI, owned by the Utility and resides in the Utility meter, which enables secure interactions between HAN Devices Registered on its network and the Utility AMI.
ESI – Utility	An ESI, owned by the Utility, which enables secure interactions between HAN Devices Registered on its network and the Utility AMI. The Utility ESI functionality may reside in the Customer EMS or customer broadband router.
EVSE / EUMD	Electric Vehicle Supply Equipment / End Use Metering Device
Internet / Extranet gateway(s) – REPi	These are gateways used to connect internal REPi networks with external networks.
Internet / Extranet gateway(s) – Utility	These are gateways used to connect internal utility networks with external networks.
IPD	In Premise Display
Load Cntl Device	A device used within the customer domain for load management (e.g. Air conditioning, etc)
MDMS	The application responsible for the collection and retrieval of all relevant customer information for purposes of billing and facilitating interaction.
NMS	A system or series of systems that are utilized to operate and manage utility assets that interact on any given network. These assets are comprised of both hardware and software components that require ongoing monitoring and management.

Actor	Description
PCT	A device within the premise that has communication capabilities and controls heating, ventilation and cooling systems.
PHEV	Plug-in Hybrid Electric Vehicles - Cars or other vehicles that draw electricity from batteries to power an electric motor for vehicle propulsion. PHEVs also contain an internal combustion engine.
Smart Appliance	A white good or household appliance, that has HAN communication capability and is capable of receiving signals from authorized parties (e.g. Utility, Service Provider, EMS, Consumer, etc.) and of adjusting its operational mode based on Consumer preference

5.12.3 Applicable Payload Information

Payload Name	Description	CSWG LICs	C-I-A	Confidentiality	Integrity	Availability
han_dev_join_ack	HAN devices send to CIS / Billing acknowledgement that HAN device has successfully processed the join request	13, 15/16	L-M-M	None to minimal harm to customer or organization for access to/disclosure of payload data	Inaccurate device ID, mac address and acknowledgement code will cause the Demand Response system to not have correct information about where load control devices are installed	Not receiving the response payload to this command would cause the customer and the energy service provider to not have timely feedback about whether a device joined the network
han_dev_join_cmd	CIS / Billing sends command to initiate the join command to HAN devices	13, 15/16	L-M-M	None to minimal harm to customer or organization for access to/disclosure of payload data	Inaccurate device ID, mac address and command code will cause the Demand Response system to not have correct information about where load control devices are installed	Not receiving the response payload to this command would cause the customer and the energy service provider to not have timely feedback about whether a device joined the network
han_dev_join_cmd_err	HAN device sends HAN device join request error to CIS / Billing and NMS	13, 15/16	L-M-M	None to minimal harm to customer or organization for access to/disclosure of payload data	Inaccurate device ID, mac address and error code will cause the Demand Response system to not properly troubleshoot communication problems	Not receiving the response payload to this command would cause the customer and the energy service provider to not have timely feedback about whether a device joined the network
han_dev_un_join_ack	HAN device sends to CIS / Billing acknowledgement that HAN device has successfully processed the un_joined command	13, 15/16	L-M-M	None to minimal harm to customer or organization for access to/disclosure of payload data	Inaccurate device ID, mac address and acknowledgement code will cause the Demand Response system to not have correct information about where load control devices are un-installed	Not receiving the response payload to this command would cause the customer and the energy service provider to not have timely feedback about whether a device un-joined the network
han_dev_un_join_cmd	CIS / Billing sends command to initiate the un-join command to HAN devices	13, 15/16	L-M-M	None to minimal harm to customer or organization for access to/disclosure of payload data	Inaccurate device ID, mac address and command code will cause the Demand Response system to not have correct information about where load control devices are un-installed	Not receiving the response payload to this command would cause the customer and the energy service provider to not have timely feedback about whether a device un-joined the network
han_dev_un-join_cmd_err	HAN device sends HAN device join request error to CIS / Billing and NMS	13, 15/16	L-M-M	None to minimal harm to customer or organization for access to/disclosure of payload data	Inaccurate device ID, mac address and error code will cause the Demand Response system to not properly troubleshoot communication problems	Not receiving the response payload to this command would cause the customer and the energy service provider to not have timely feedback about whether a device joined the network

5.12.4 Scenarios

5.12.4.1 Scenario: Device Joins the Network

Narrative

A consumer/customer wishes to connect a Premises / Home Area Network device to the network. The customer from the IVR, Web Portal, etc submits a device ID and network key for the device to join the network with the han_dev_join_cmd payload. When successful, the device or 2-way meter sends an acknowledgement of the successful command with the han_dev_join_ack payload. If the Join procedure is unsuccessful, the han_dev_join_cmd_err payload shall be sent.

Business Objectives

Payload Name	Payload Type	Payload Attributes	PAP02 Baseload (routine)	PAP02 Highload (full load)	Originating Actor	Destination Actor	Reliability	Latency	When	How Often	Payload Size
han_dev_join_ack	ack	device ID, mac address, acknowledgement code	X	X	2-Way Meter - Electr, 2-Way Meter - Gas, 2-Way Meter - Water, IPD, Cust. EMS, PCT, PHEV, Smart Appliance, Load Cntl Device	CIS/Billing - Utility,CIS/Billing - REPi	> 98%	< 20 sec	24x7	x per | HANdevice per | Utl join request per year,x per | HANdevice per | REPi join request per year	25
han_dev_join_cmd	cmd	device ID, mac address, security material, operation timeout value, command code	X	X	CIS/Billing - Utility,CIS/Billing - REPi	2-Way Meter - Electr, 2-Way Meter - Gas, 2-Way Meter - Water, IPD, Cust. EMS, PCT, PHEV, Smart Appliance, Load Cntl Device	> 98%	< 20 sec	24x7	x per | HANdevice per | Utl join request per year,x per | HANdevice per | REPi join request per year	25

Payload Name	Payload Type	Payload Attributes	PAP02 Baseload (routine)	PAP02 Highload (full load)	Originating Actor	Destination Actor	Reliability	Latency	When	How Often	Payload Size
han_dev_join_cmd_err	cmd-err	device ID, mac_address, error code	X	X	2-Way Meter - Electr, 2-Way Meter - Gas, 2-Way Meter - Water, IPD, Cust. EMS, PCT, PHEV, Smart Appliance, Load Cntl Device	CIS/Billing - Utility,NMS,CIS/Billing - REPi	> 98%	< 20 sec	8AM - 8PM	1 per 1000 per | HANdevice per | Utl join request per day,1 per 1000 per | HANdevice per | join request per day,1 per 1000 per | HANdevice per | REPi join request per day	25

5.12.4.2 Scenario: Device Un-Joins the Network

Narrative

A consumer/customer wishes to remove a Premises / Home Area Network device from the network. The customer from the IVR, Web Portal, etc. selects the device ID for the device to be removed from the network with the han_dev_un_join_ack payload. When successful, the device or 2-way meter sends an acknowledgement han_dev_un_join_ack payload as confirmation of the successful device removal command. If the un-join process was unsuccessful, the han_dev_un-join_cmd_err payload shall be sent.

Business Objectives

Payload Name	Payload Type	Payload Attributes	PAP02 Baseload (routine)	PAP02 Highload (full load)	Originating Actor	Destination Actor	Reliability	Latency	When	How Often	Payload Size
han_dev_un_join_ack	ack	device ID, mac address, acknowledgement code	X	X	2-Way Meter - Electr, 2-Way Meter - Gas, 2-Way Meter - Water, IPD, Cust. EMS, PCT, PHEV, Smart Appliance, Load Cntl Device	CIS/Billing - Utility,CIS/Billing - REPi	> 98%	< 20 sec	24x7	x per | HANdevice per | Utl un-join request per year,x per | HANdevice per | REPi un-join request per year	25
han_dev_un_join_cmd	cmd	device ID, mac address, command code	X	X	CIS/Billing - Utility,CIS/Billing - REPi	2-Way Meter - Electr, 2-Way Meter - Gas, 2-Way Meter - Water, IPD, Cust. EMS, PCT, PHEV, Smart Appliance, Load Cntl Device	> 98%	< 20 sec	24x7	x per | HANdevice per | Utl un-join request per year,x per | HANdevice per | REPi un-join request per year	25

Payload Name	Payload Type	Payload Attributes	PAP02 Baseload (routine)	PAP02 Highload (full load)	Originating Actor	Destination Actor	Reliability	Latency	When	How Often	Payload Size
han_dev_un-join_cmd_err	cmd-err	device ID, mac_address, error code	X	X	2-Way Meter - Electr, 2-Way Meter - Gas, 2-Way Meter - Water, IPD, Cust. EMS, PCT, PHEV, Smart Appliance, Load Cntl Device	CIS/Billing - Utility,NMS,CIS/Billing - REPi	> 98%	< 20 sec	8AM - 8PM	1 per 1000 per | HANdevice per | Utl un-join request per day,1 per 1000 per | HANdevice per | un-join request per day,1 per 1000 per | HANdevice per | REPi un-join request per day	25

5.13 Pricing TOU / RTP/ CPP

5.13.1 Overview

The Pricing TOU/RTP/CPP outlines three different methods for publishing price information to meters and devices within a customers' premises. These methods are typically associated with Energy Supplier programs. Below are a few examples of these programs.

TOU (Time of USE) Programs

TOU programs allow customers to lower electric bills without reducing power consumption, as long as customers are able to shift electricity use to off-peak times. Customers in this program typically accept a price schedule that has a higher price during the middle of the day with lower prices in the morning and evening. For more information, perform an internet search with the keywords "Utility TOU Programs".

RTP (Real Time Pricing)

RTP programs are beneficial to customers with the flexibility to shift or reduce energy usage with short notice. These programs can pass thru energy prices at markets directly to customer with a contracted granularity (e.g. within 15 minutes). For more information, perform an internet search with the key words "Utility Real Time Pricing".

CPP (Critical Peak Pricing)

Critical Peak Pricing programs are typically used during times of peak generation and peak load from Customers. The Energy Supplier needs to curtail load and quickly and sends CPP messages to enrolled customers where drastic load reduction takes place. Some CPP programs use higher prices curing CPP periods while others incent customers by offering a rebate for the avoided load. For more information, perform an internet search with the key words "Utility Critical Peak Pricing".

5.13.1.1 Reference Architecture with Domains, Actors and Interfaces

Smart Grid Conceptual Actors / Data Flow Diagram – Cross Domain Network Focused – OpenSG / SG-Network TF

DR-DLC Use Case

DRAFT 14Feb2012
Base – file SG-NET-diagram-r5.1.vsd
page size: ANSI-D

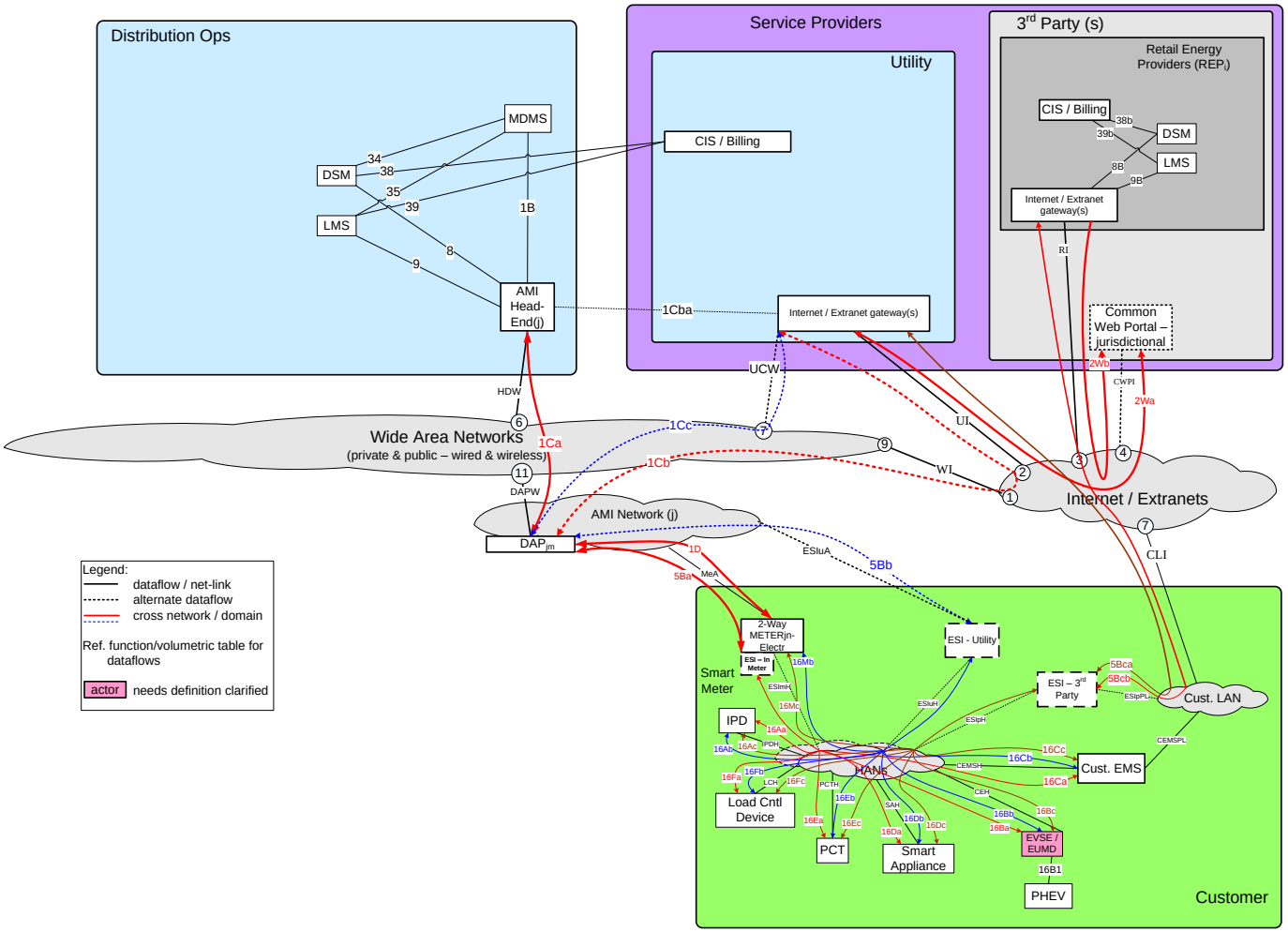

5.13.1.2 Possible communication paths

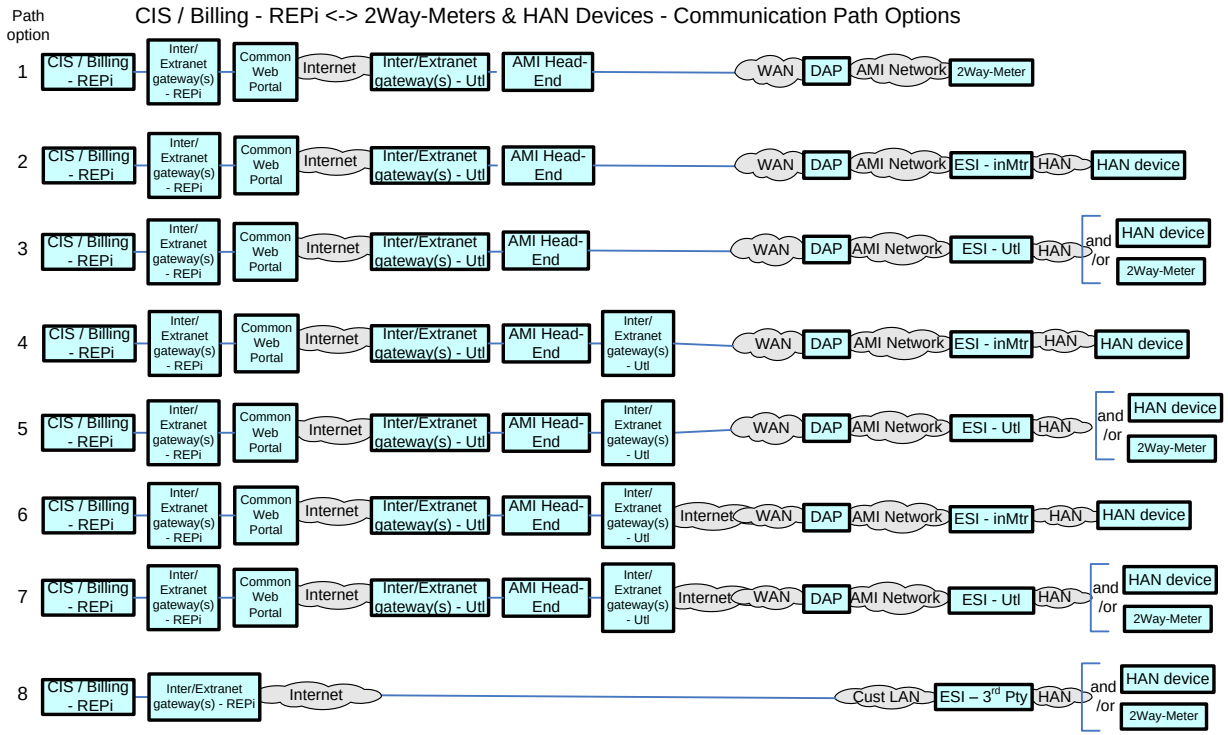

5.13.2 Actors

Actor	Description
2-Way Meter - Electr	A bi-directional communication device used to perform measurement of electrical energy usage for residential use.
AMI Head-End(j)	The AMI head end is responsible for the operation and coordination of AMI system components. It represents the central nervous system of the AMI system.
Common Web Portal	Web interface for Regional Transmission Operator, customers, retail electric providers and transmission/distribution service provider to function as a clearing house for energy information.
Cust. EMS	A customer owned energy management system used to manage energy with a premises.
DAPjm	This is the Data Aggregation Point on the NAN. It is essentially the point of convergence for all communication between SG devices and utility back office systems. In this specific use case it provides a communication conduit for AMI Smart Meters.
DSM - REPi	Demand Side Management - Retail Energy Provider; A system that co-ordinates demand response / load shedding messages indirectly to devices (e.g. Set point adjustment)
DSM - Utility	Demand Side Management - Utility; A system that co-ordinates demand response / load shedding messages indirectly to devices (e.g. Set point adjustment)
ESI - 3rd Party	An ESI, owned by the Customer and not provided by the Utility, which enables secure interactions between HAN Devices Registered on its network and the service provider e.g. REP. The 3rd Party ESI functionality may reside in the Customer EMS or customer's
ESI - In Meter	An ESI, owned by the Utility and resides in the Utility meter, which enables secure interactions between HAN Devices Registered on its network and the Utility AMI.
ESI - Utility	An ESI, owned by the Utility, which enables secure interactions between HAN Devices Registered on its network and the Utility AMI. The Utility ESI functionality may reside in the Customer EMS or customer broadband router.
EVSE / EUMD	Electric Vehicle Supply Equipment / End Use Metering Device
Internet / Extranet gateway(s) - REPi	These are gateways used to connect internal REPi networks with external networks.
Internet / Extranet gateway(s) - Utility	These are gateways used to connect internal utility networks with external networks.
IPD	In Premise Display
LMS - REPi	Load management system

Actor	Description
LMS - Utility	Load management system - System that controls load by sending messages directly to device (e.g. On/Off)
Load Cntl Device	A device used within the customer domain for load management (e.g. Air conditioning, etc)
PCT	A device within the premise that has communication capabilities and controls heating, ventilation and cooling systems.
PHEV	Plug-in Hybrid Electric Vehicles - Cars or other vehicles that draw electricity from batteries to power an electric motor for vehicle propulsion. PHEVs also contain an internal combustion engine.
Smart Appliance	A white good or household appliance, that has HAN communication capability and is capable of receiving signals from authorized parties (e.g. Utility, Service Provider, EMS, Consumer, etc.) and of adjusting its operational mode based on Consumer preference

5.13.3 Applicable Payload Information

Payload Name	Description	CSWG LICs	C-I-A	Confidentiality	Integrity	Availability
CPP_pricing-data_ack	HAN device participating in the CPP event sends message to LMS or DSM for either Utility of REP, acknowledging receipt and processing of the CPP command	13/14, 15/16	L-L-L	None to minimal harm to customer or organization for access to/disclosure of payload data	Minimal harm to customer or organization if a false acknowledgement from the wrong HAN device is sent/received, provided not in-scale	Receipt of these messages need to completed in a reasonable time
CPP_pricing-data_brdcst	LMS or DSM for either Utility of REP sends CPP event command to all CPP enrolled HAN devices	13/14, 15/16	L-H-L	None to minimal harm to customer or organization for access to/disclosure of payload data	These messages need to be properly attributed to the Energy Service Provider that sent them and the content of message	Receipt of these messages need to completed in a reasonable time
CPP_pricing-data_cmd	LMS or DSM for either Utility of REP sends CPP event command to specific CPP enrolled HAN device	13/14, 15/16	L-H-L	None to minimal harm to customer or organization for access to/disclosure of payload data	These messages need to be properly attributed to the Energy Service Provider that sent them and the content of message	Receipt of these messages need to completed in a reasonable time
CPP_pricing-data_mltcst	LMS or DSM for either Utility of REP sends CPP event command to specific groups of CPP enrolled HAN devices	13/14, 15/16	L-H-L	None to minimal harm to customer or organization for access to/disclosure of payload data	These messages need to be properly attributed to the Energy Service Provider that sent them and the content of message	Receipt of these messages need to completed in a reasonable time
RTP_pricing-data_ack	HAN device participating in the RTP program sends message to LMS or DSM for either Utility of REP, acknowledging receipt and processing of the RTP pricing data	13/14, 15/16	L-L-L	None to minimal harm to customer or organization for access to/disclosure of payload data	Minimal harm to customer or organization if a false acknowledgement from the wrong HAN device is sent/received, provided not in-scale	Receipt of these messages need to completed in a reasonable time
RTP_pricing-data_brdcst	LMS or DSM for either Utility of REP sends RTP pricing data command to all RTP enrolled HAN devices	13/14, 15/16	L-H-L	None to minimal harm to customer or organization for access to/disclosure of payload data	These messages need to be properly attributed to the Energy Service Provider that sent them and the content of message	Receipt of these messages need to completed in a reasonable time
RTP_pricing-data_cmd	LMS or DSM for either Utility of REP sends RTP pricing data command to specific RTP enrolled HAN device	13/14, 15/16	L-H-L	None to minimal harm to customer or organization for access to/disclosure of payload data	These messages need to be properly attributed to the Energy Service Provider that sent them and the content of message	Receipt of these messages need to completed in a reasonable time
RTP_pricing-data_mltcst	LMS or DSM for either Utility of REP sends RTP pricing data command to specific groups of RTP enrolled HAN devices	13/14, 15/16	L-H-L	None to minimal harm to customer or organization for access to/disclosure of payload data	These messages need to be properly attributed to the Energy Service Provider that sent them and the content of message	Receipt of these messages need to completed in a reasonable time
TOU_pricing-data_ack	HAN device participating in the TOU program sends message to LMS or DSM for either Utility of REP, acknowledging receipt and processing of the TOU pricing data	13/14, 15/16	L-L-L	None to minimal harm to customer or organization for access to/disclosure of payload data	Minimal harm to customer or organization if a false acknowledgement from the wrong HAN device is sent/received, provided not in-scale	Receipt of these messages need to completed in a reasonable time

Payload Name	Description	CSWG LICs	C-I-A	Confidentiality	Integrity	Availability
TOU_pricing-data_brdcst	LMS or DSM for either Utility of REP sends TOU pricing data command to all TOU enrolled HAN devices	13/14, 15/16	L-H-L	None to minimal harm to customer or organization for access to/disclosure of payload data	These messages need to be properly attributed to the Energy Service Provider that sent them and the content of message	Receipt of these messages need to completed in a reasonable time
TOU_pricing-data_cmd	LMS or DSM for either Utility of REP sends TOU pricing data command to specific TOU enrolled HAN device	13/14, 15/16	L-H-L	None to minimal harm to customer or organization for access to/disclosure of payload data	These messages need to be properly attributed to the Energy Service Provider that sent them and the content of message	Receipt of these messages need to completed in a reasonable time
TOU_pricing-data_mltcst	LMS or DSM for either Utility of REP sends TOU pricing data command to specific groups of TOU enrolled HAN devices	13/14, 15/16	L-H-L	None to minimal harm to customer or organization for access to/disclosure of payload data	These messages need to be properly attributed to the Energy Service Provider that sent them and the content of message	Receipt of these messages need to completed in a reasonable time

5.13.4 Scenarios

5.13.4.1 Scenario: Energy Supplier sends TOU pricing to customers

Narrative

In this scenario, the Energy Supplier sends TOU pricing information in the TOU_pricing-data_cmd, TOU_pricing-data_brdcst, or TOU_pricing-data-mltcst payloads via unicast, broadcast or multicast respectively to the aforementioned payloads. The receipt of this payload shall be acknowledged by sending the TOU_pricing-data_ack payload.

Business Objectives

Payload Name	Payload Type	Payload Attributes	PAP02 Baseload (routine)	PAP02 Highload (full load)	Originating Actor	Destination Actor	Reliability	Latency	When	How Often	Payload Size
TOU_pricing-data_ack	ack	HAN device ID, acknowledgement code	0	X	2-Way Meter - Electr, IPD, Cust. EMS, PCT, PHEV, Smart Appliance, Load Cntl Device	LMS - Utility,DSM - Utility,LMS - REPi,DSM - REPi	90% success every 4-6 hr, 98% success over 1 day, > 99.5% over 2 day	< 4 hr (expected window of data delivery)	24x7	x per 1000 per | Utl-joined-TOU-HANdevice per | LMS - Utl TOU price data event - 4 per year,x per 1000 per | Utl-joined-TOU-HANdevice per | DMS - Utl TOU price data event - 4 per year,x per 1000 per | REPi-joined-TOU-HANdevice per | LMS - REPi TOU price data event,x per 1000 per | REPi-joined-TOU-HANdevice per | DSM - REPi TOU price data event	25

Payload Name	Payload Type	Payload Attributes	PAP02 Baseload (routine)	PAP02 Highload (full load)	Originating Actor	Destination Actor	Reliability	Latency	When	How Often	Payload Size
TOU_pricing-data_brdcst	cmd	HAN device broadcast group ID, TOU price data, TOU effective time period	0	X	LMS - Utility,DSM - Utility,LMS - REPi,DSM - REPi	2-Way Meter - Electr, IPD, Cust. EMS, PCT, PHEV, Smart Appliance, Load Cntl Device	> 98%	< 1 min	24x7	1 per | Utl-joined-TOU-HANdevice per | LMS - Utl TOU price data broadcast event - 4 per year,1 per | Utl-joined-TOU-HANdevice per | DMS - Utl TOU price data broadcast event - 4 per year,1 per | REPi-joined-TOU-HANdevice per | LMS - REPi TOU price data broadcast event - 12 per year,1 per | REPi-joined-TOU-HANdevice per | DSM - REPi TOU price data broadcast event - 12 per year	100
TOU_pricing-data_cmd	cmd	HAN device ID, TOU effective time period, TOU price data	0	X	LMS - Utility,DSM - Utility,LMS - REPi,DSM - REPi	2-Way Meter - Electr, IPD, Cust. EMS, PCT, PHEV, Smart Appliance, Load Cntl Device	> 98%	< 1 min	24x7	60 per 1000 per | Utl-joined-TOU-HANdevice per | day,60 per 1000 per | REPi-joined-TOU-HANdevice per | day	100
TOU_pricing-data_mltcst	cmd	HAN device multicast group ID, TOU price data, TOU effective time period	0	X	LMS - Utility,DSM - Utility,LMS - REPi,DSM - REPi	2-Way Meter - Electr, IPD, Cust. EMS, PCT, PHEV, Smart Appliance, Load Cntl Device	> 98%	< 1 min	24x7	1 per | Utl-joined-TOU-HANdevice per | LMS - Utl TOU price data multicast event - 4 per year,1 per | Utl-joined-TOU-HANdevice per | DMS - Utl TOU price data multicast event - 4 per year,1 per | REPi-joined-TOU-HANdevice per | LMS - REPi TOU price data multicast request event,1 per | REPi-joined-TOU-HANdevice per | DSM - REPi TOU price data multicast request event	100

5.13.4.2 Scenario: Energy Supplier sends RTP information to customers

Narrative

In this scenario, the Energy Supplier sends RTP information in the RTP_pricing-data_cmd, RTP_pricing-data_brdcst, or RTP_pricing-data_mltcst payloads via unicast, broadcast or multicast respectively to the aforementioned payloads. The receipt of this payload shall be acknowledged by sending the RTP_pricing-data_ack payload.

Business Objectives

Payload Name	Payload Type	Payload Attributes	PAP02 Baseload (routine)	PAP02 Highload (full load)	Originating Actor	Destination Actor	Reliability	Latency	When	How Often	Payload Size
RTP_pricing-data_ack	ack	HAN device ID, acknowledgement code	X	X	2-Way Meter - Electr, IPD, Cust. EMS, PCT, PHEV, Smart Appliance, Load Cntl Device	LMS - Utility,DSM - Utility,LMS - REPi,DSM - REPi	90% success every 4-6 hr, 98% success over 1 day, > 99.5% over 2 day	< 4 hr (expected window of data delivery)	24x7	x per 1000 per | Utl-joined-RTP-HANdevice per | LMS - Utl RTP price data event - 96 per day,x per 1000 per | Utl-joined-RTP-HANdevice per | DMS - Utl RTP price data event - 96 per day,x per 1000 per | REPi-joined-RTP-HANdevice per | LMS - REPi RTP price data event,x per 1000 per | REPi-joined-RTP-HANdevice per | DSM - REPi RTP price data event	25
RTP_pricing-data_brdcst	cmd	HAN device broadcast group ID, RTP price data, RTP effective time period	X	X	LMS - Utility,DSM - Utility,LMS - REPi,DSM - REPi	2-Way Meter - Electr, IPD, Cust. EMS, PCT, PHEV, Smart Appliance, Load Cntl Device	> 98%	< 1 min	24x7	1 per | Utl-joined-RTP-HANdevice per | LMS - Utl RTP price data broadcast event - 96 per day,1 per | Utl-joined-RTP-HANdevice per | DMS - Utl RTP price data broadcast event - 96 per day,1 per | REPi-joined-RTP-HANdevice per | LMS - REPi RTP price data broadcast event - 12 per year,1 per | REPi-joined-RTP-HANdevice per | DSM - REPi RTP price data broadcast event - 12 per year	100

Payload Name	Payload Type	Payload Attributes	PAP02 Baseload (routine)	PAP02 Highload (full load)	Originating Actor	Destination Actor	Reliability	Latency	When	How Often	Payload Size
RTP_pricing-data_cmd	cmd	HAN device ID, RTP effective time period, RTP price data	X	X	LMS - Utility,DSM - Utility,LMS - REPi,DSM - REPi	2-Way Meter - Electr, IPD, Cust. EMS, PCT, PHEV, Smart Appliance, Load Cntl Device	> 98%	< 1 min	24x7	60 per 1000 per | Utl-joined-RTP-HANdevice per | 6 per day,60 per 1000 per | REPi-joined-RTP-HANdevice per | 6 per day	100
RTP_pricing-data_mltcst	cmd	HAN device multicast group ID, RTP price data, RTP effective time period	X	X	LMS - Utility,DSM - Utility,LMS - REPi,DSM - REPi	2-Way Meter - Electr, IPD, Cust. EMS, PCT, PHEV, Smart Appliance, Load Cntl Device	> 98%	< 1 min	24x7	1 per | Utl-joined-RTP-HANdevice per | LMS - Utl RTP price data multicast event - 96 per day,1 per | Utl-joined-RTP-HANdevice per | DMS - Utl RTP price data multicast event - 96 per day,1 per | REPi-joined-RTP-HANdevice per | LMS - REPi RTP price data multicast request event,1 per | REPi-joined-RTP-HANdevice per | DSM - REPi RTP price data multicast request event	100

5.13.4.3 Scenario: Energy Supplier sends CPP information to customers

Narrative

In this scenario, the Energy Supplier sends CPP information in the CPP_pricing-data_cmd, CPP_pricing-data_brdcst, or CPP_pricing-data_mltcst payloads via unicast, broadcast or multicast respectively to the aforementioned payloads. The receipt of this payload shall be acknowledged by sending the CPP_pricing-data_ack payload.

Business Objectives

Payload Name	Payload Type	Payload Attributes	PAP02 Baseload (routine)	PAP02 Highload (full load)	Originating Actor	Destination Actor	Reliability	Latency	When	How Often	Payload Size
CPP_pricing-data_ack	ack	HAN device ID, acknowledgement code	0	X	2-Way Meter - Electr, IPD, Cust. EMS, PCT, PHEV, Smart Appliance, Load Cntl Device	LMS - Utility,DSM - Utility,LMS - REPi,DSM - REPi	90% success every 4-6 hr, 98% success over 1 day, > 99.5% over 2 day	< 4 hr (expected window of data delivery)	24x7	x per 1000 per | Utl-joined-CPP-HANdevice per | LMS - Utl CPP price data event - 12 per year,x per 1000 per | Utl-joined-CPP-HANdevice per | DMS - Utl CPP price data event - 12 per year,x per 1000 per | REPi-joined-CPP-HANdevice per | LMS - REPi CPP price data event,x per 1000 per | REPi-joined-CPP-HANdevice per | DSM - REPi CPP price data event	25

Payload Name	Payload Type	Payload Attributes	PAP02 Baseload (routine)	PAP02 Highload (full load)	Originating Actor	Destination Actor	Reliability	Latency	When	How Often	Payload Size
CPP_pricing-data_brdcst	cmd	HAN device broadcast group ID, CPP price data, CPP effective time period	0	X	LMS - Utility,DSM - Utility,LMS - REPi,DSM - REPi	2-Way Meter - Electr, IPD, Cust. EMS, PCT, PHEV, Smart Appliance, Load Cntl Device	> 98%	< 1 min	24x7	1 per | Utl-joined-CPP-HANdevice per | LMS - Utl CPP price data broadcast event - 12 per year,1 per | Utl-joined-CPP-HANdevice per | DMS - Utl CPP price data broadcast event - 12 per year,1 per | REPi-joined-CPP-HANdevice per | LMS - REPi CPP price data broadcast event - 12 per year,1 per | REPi-joined-CPP-HANdevice per | DSM - REPi CPP price data broadcast event - 12 per year	100
CPP_pricing-data_cmd	cmd	HAN device ID, CPP effective time period, CPP price data	0	X	LMS - Utility,DSM - Utility,LMS - REPi,DSM - REPi	2-Way Meter - Electr, IPD, Cust. EMS, PCT, PHEV, Smart Appliance, Load Cntl Device	> 98%	< 1 min	24x7	60 per 1000 per | Utl-joined-CPP-HANdevice per | day,60 per 1000 per | REPi-joined-CPP-HANdevice per | day	100
CPP_pricing-data_mltcst	cmd	HAN device multicast group ID, CPP price data, CPP effective time period	0	X	LMS - Utility,DSM - Utility,LMS - REPi,DSM - REPi	2-Way Meter - Electr, IPD, Cust. EMS, PCT, PHEV, Smart Appliance, Load Cntl Device	> 98%	< 1 min	24x7	1 per | Utl-joined-CPP-HANdevice per | LMS - Utl CPP price data multicast event - 12 per year,1 per | Utl-joined-CPP-HANdevice per | DMS - Utl CPP price data multicast event - 12 per year,1 per | REPi-joined-CPP-HANdevice per | LMS - REPi CPP price data multicast request event,1 per | REPi-joined-CPP-HANdevice per | DSM - REPi CPP price data multicast request event	100

5.14 Utility Service Switch/Valve Operation

5.14.1 Overview

Service Switch operations include the disconnect switch within an Electric Utility meter along with Gas and Water service valve operation. The scenarios included with this use case include

- Utility/Operator sends a service switch operation command to an Electric Meter.
- Utility/Operator cancels a service switch operation command to an Electric Meter.
- Utility/Operator requests the operational state of an Electric Meter service switch.
- Electric Meter Service Switch communication or operation failure.
- Electric Meter notifies the Utility/Operator that a state change has occurred with an Electric Meter service switch
- Utility/Operator sends a service switch operation command to a Water or Gas Service Valve.
- Utility/Operator cancels a service switch operation command to a Water or Gas Service Valve.
- Utility/Operator requests the operational state of a Water or Gas Service Valve.
- Water or Gas Service Valve communication or operation failure.
- Water or Gas Valve notifies the Utility/Operator that a state change has occurred with a Water or Gas Valve

5.14.1.1 Reference Architecture with Domains, Actors and Interfaces

Smart Grid Conceptual Actors / Data Flow Diagram – Cross Domain Network Focused – OpenSG / SG-Network TF

Meter Service Switch / Valve Use Case

DRAFT 14Feb2012
Base – file SG-NET-diagram-r5.1.vsd
page size: ANSI-D

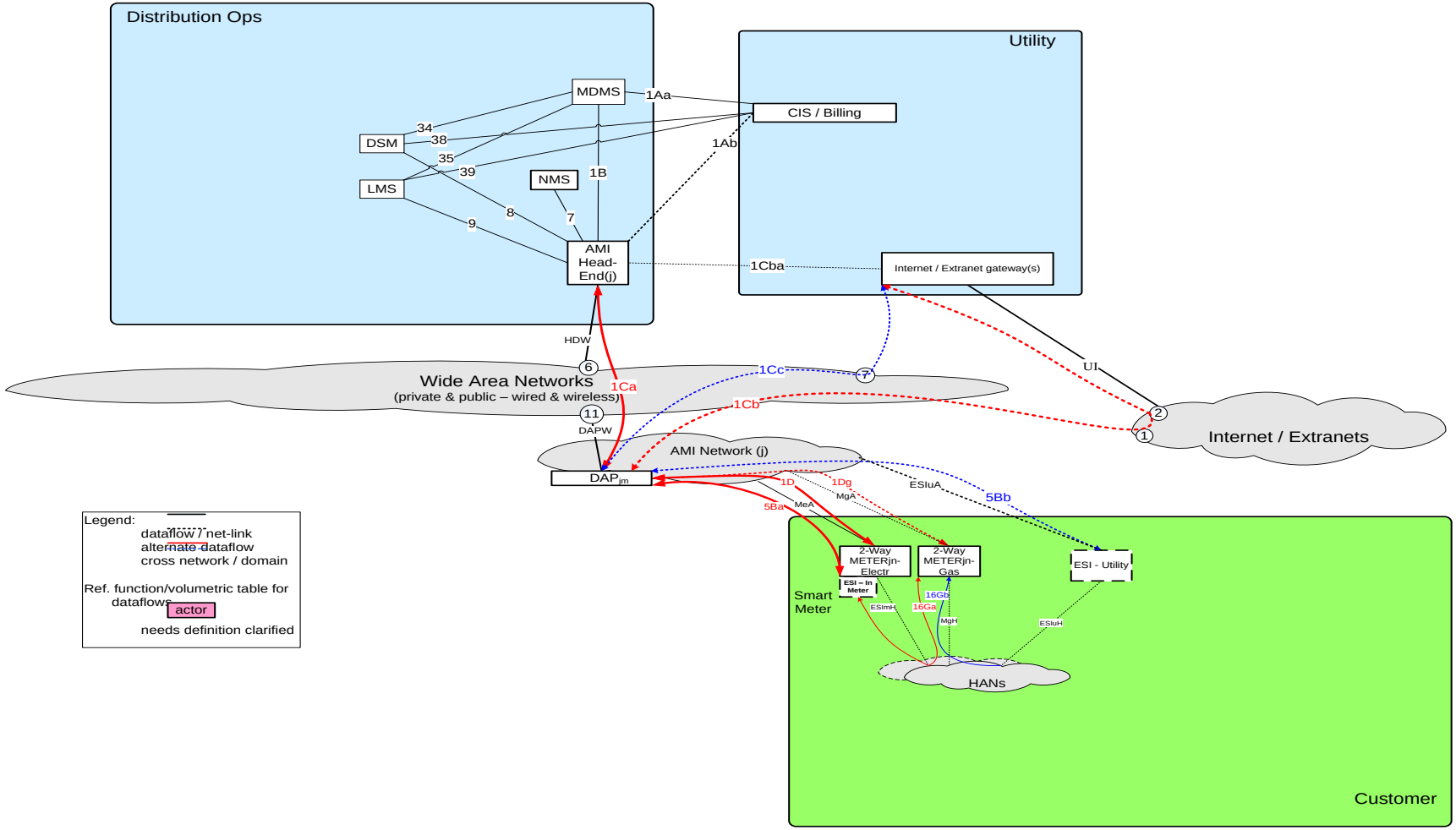

5.14.1.2 Possible communication paths

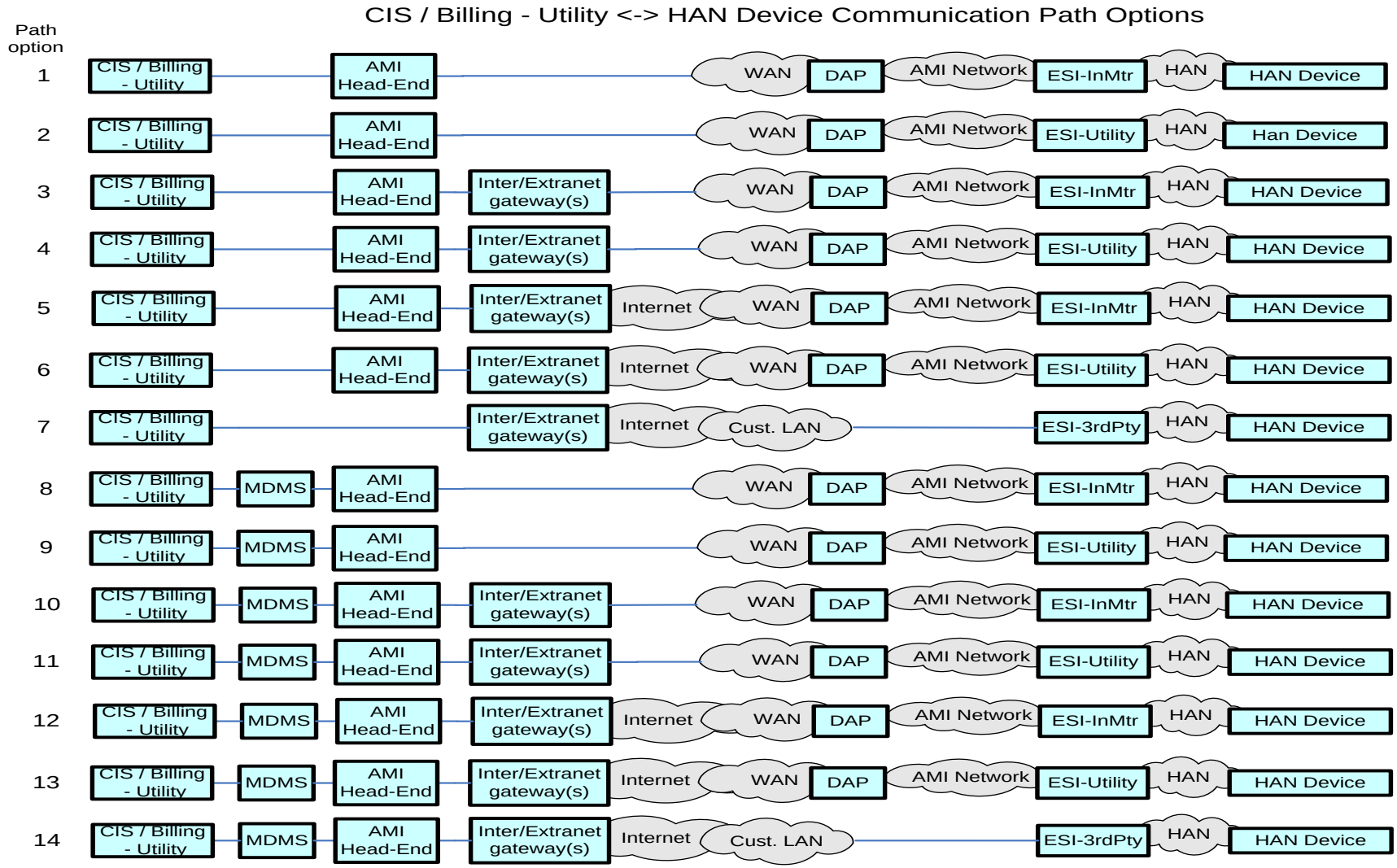

5.14.2 Actors

Actor	Description
2-Way Meter - Electr	A bi-directional communication device used to perform measurement of electrical energy usage for residential use.
2-Way Meter – Gas	A bi-directional communication device used to perform measurement of gas consumption for residential use.
AMI Head-End(j)	The AMI head end is responsible for the operation and coordination of AMI system components. It represents the central nervous system of the AMI system.
CIS/Billing – Utility	A utility billing system used for reconcilling customer payments for electricity usage. This system may also be used for managing vendors of electricity generation.
DAPjm	This is the Data Aggregation Point on the NAN. It is essentially the point of convergence for all communication between SG devices and utility back office systems. In this specific use case it provides a communication conduit for AMI Smart Meters.
DSM – Utility	Demand Side Management - Utility; A system that co-ordinates demand response / load shedding messages indirectly to devices (e.g. Set point adjustment)
Internet / Extranet gateway(s) - Utility	These are gateways used to connect internal utility networks with external networks.
LMS – Utility	Load management system - System that controls load by sending messages directly to device (e.g. On/Off)
MDMS	The application responsible for the collection and retrieval of all relevant customer information for purposes of billing and facilitating interaction.
NMS	A system or series of systems that are utilized to operate and manage utility assets that interact on any given network. These assets are comprised of both hardware and software components that require ongoing monitoring and management.

5.14.3 Applicable Payloads

Payload Name	Description	CSWG LICs	C-I-A	Confidentiality	Integrity	Availability
SW_opr_cancel_cmd	CIS/Billing - Utility sends communication to Meter cancelling the issuance of a previously issued switch open or close command. This is a grid op task not a maint task. A meter is not an electric grid critical infrastructure component. HAN networks are not used	13/14	M-H-M	Minimal harm to individual customer, rising to serious impact (if in scale) to organization for access to/disclosure of payload data as the payload data is tagged to a Meter ID not a customer account	Inaccurate command parameters associated to a meter would lead to incorrect service switch operation, and potential serious (especially if on life support) harm to customer or potentially severe harm to customer and/or Utility (if in-scale), leading to customer frustration and likely complaint filed with jurisdiction	Not receiving this payload (and the follow-on acknowledgement) may trigger an immediate retry, which if fails again may lead to a field visit after potential serious harm to customer, leading to customer frustration and likely complaint filed with jurisdiction
SW_opr_cmd	CIS/Billing - Utility sends communication to Meter issuing a service switch open or close command. This is a grid op task not a maint task. A meter is not an electric grid critical infrastructure component. HAN networks are not used	13/14	M-H-M	Minimal harm to individual customer, rising to serious impact (if in scale) to organization for access to/disclosure of payload data as the payload data is tagged to a Meter ID not a customer account	Inaccurate command parameters associated to a meter would lead to incorrect service switch operation, and potential serious (especially if on life support) harm to customer or potentially severe harm to customer and/or Utility (if in-scale), leading to customer frustration and likely complaint filed with jurisdiction	Not receiving this payload (and the follow-on acknowledgement) may trigger an immediate retry, which if fails again may lead to a field visit after potential serious harm to customer, leading to customer frustration and likely complaint filed with jurisdiction
SW_opr_cmd_ack	Meter sends to CIS/Billing - Utility & MDMS actors of service switch command receipt/operate acknowledgment. This is a grid op task not a maint task. A meter is not an electric grid critical infrastructure component. HAN networks are not used	13/14	L-L-L	Minimal harm to customer or organization for access to/disclosure of payload data as the payload data is tagged to a Meter ID not a customer account	Inaccurate command parameters associated to a meter might lead to incorrect next work flow task execution, or a extra meter service switch state inquiry, with minimal harm to customer or organization	Not receiving the response payload to the command may create missing dependency for a workflow next step execution, and may trigger an immediate retry, which if fails again may lead to further meter health checks, with minimal harm to customer or organization
SW_opr_cmd_comm-err	DAP or AMI Head-End sends to CIS/Billing - Utility, MDMS, NMS service switch operate communication failure notification. Even though Meter is not a electric grid critical infrastructure component, this payload may be used in performing meter and telecomm network diagnostics. HAN networks are not used.	13, 20	L-L-L	Minimal harm to customer or organization for access to/disclosure of payload data as the payload data is tagged to a Meter ID not a customer account	A false negative or false positive payload attributes associated to a specific meter may lead to an unnecessary health check of the meter and the telecomm network to the meter	Not receiving this payload to the command may lead to multiple repeated attempts to request the service switch operation, which may lead to a specific customers frustration and/or complaint filed with jurisdiction

Payload Name	Description	CSWG LICs	C-I-A	Confidentiality	Integrity	Availability
SW_opr_fail_cmd-err	Meter sends service switch operate failure notification to CIS/Billing - Utility & MDMS. Even though Meter is not a electric grid critical infrastructure component, this payload may be used in performing meter and telecomm network diagnostics. HAN networks are not used.	13, 20	L-M-L	Minimal harm to customer or organization for access to/disclosure of payload data as the payload data is tagged to a Meter ID not a customer account	A false negative or false positive payload attributes associated to a specific meter may lead to an unnecessary health check of the meter and the associated application	Not receiving this payload to the command may lead to multiple repeated attempts to request the service switch operation, which may lead to a meter in an abnormal operating state that may lead to damage to the meter, which may lead to customer frustration and/or complaint filed with jurisdiction
SW_post-oper-info_resp-data	Meter sends service switch post operation metrology data to CIS/Billing - Utility & MDMS. This is a grid op task not a maint task. A meter is not an electric grid critical infrastructure component. HAN networks are not used	13/14	L-L-L	Minimal harm to customer or organization for access to/disclosure of payload data as the payload data is tagged to a Meter ID not a customer account	Inaccurate payload data associated to a meter may lead to an incorrect data interpretation or next workflow process execution that may lead to a partial rebuild of stored data or a reprocessing (eg re-billing) for that meter	Not receiving the response payload to the command would create missing data for a meter and may trigger an immediate retry, which if fails again may lead to organization performing unnecessary meter health checks
SW_state_cmd	CIS/Billing - Utility sends to Meter command requesting current state of service switch. This is a grid op task not a maint task. A meter is not an electric grid critical infrastructure component. HAN networks are not used	13/14	L-L-L	Minimal harm to customer or organization for access to/disclosure of payload data as the payload data is tagged to a Meter ID not a customer account	Inaccurate command parameters associated to a meter may lead to an incorrect data interpretation or next workflow process execution that may lead to a partial rebuild of stored data or a reprocessing for that meter	Not receiving the response payload to the command would create missing data for a meter and may trigger an immediate retry, which if fails again may lead to unnecessary meter health checks
SW_state_cmd_resp-data	Meter sends response to CIS/Billing - Utility, MDMS, or LMS or DSM the meter service switch state command request. This is a grid op task not a maint task. A meter is not an electric grid critical infrastructure component. HAN networks are not used	13/14	L-L-L	Minimal harm to customer or organization for access to/disclosure of payload data as the payload data is tagged to a Meter ID not a customer account	Inaccurate payload data associated to a meter may lead to an incorrect data interpretation or next workflow process execution that may lead to a partial rebuild of stored data or a reprocessing (eg re-billing) for that meter	Not receiving the response payload to the command would create missing data for a meter and may trigger an immediate retry, which if fails again may lead to may lead to unnecessary meter health checks
valve_opr_cancel_cmd	CIS/Billing Utiltiy sends a valve open or close cancel command to 2-Way gas meter	na	M-H-M	Minimal harm to individual customer, rising to serious impact (if in scale) to organization for access to/disclosure of payload data as the payload data is tagged to a Meter ID not a customer account	Inaccurate command parameters associated to a meter would lead to incorrect service valve operation, and potential catastrophic if in scale(eg Gas leak) harm to customer or potentially severe harm to customer and/or Utility (if in-scale)	Not receiving this payload (and the follow-on acknowledgement) may trigger an immediate retry, which if fails again may lead to a field visit after potential serious harm to customer, leading to customer frustration and likely complaint filed with jurisdiction

Payload Name	Description	CSWG LICs	C-I-A	Confidentiality	Integrity	Availability
valve_opr_cmd	CIS/Billing Utiltiy sends a valve open or close command to 2-Way gas meter	na	M-H-M	Minimal harm to customer or organization for access to/disclosure of payload data as the payload data is tagged to a Meter ID not a customer account	Inaccurate command parameters associated to a meter would lead to incorrect service valve operation, and potential serious (eg Gas leak) harm to customer or potentially severe harm to customer and/or Utility (if in-scale)	Not receiving this payload (and the follow-on acknowledgement) may trigger an immediate retry, which if fails again may lead to a field visit after potential serious harm to customer, leading to customer frustration and likely complaint filed with jurisdiction
valve_opr_cmd_ack	2-Way Meter - Gas sends message to CIS/Billing Utility, acknowledging receipt and processing of the valve operate command	na	L-L-L	Minimal harm to customer or organization for access to/disclosure of payload data as the payload data is tagged to a Meter ID not a customer account	Inaccurate command acknowledgements would cause the utility to not understand whether a valve was operated correctly	Not receiving the response payload to the command would cause the utility to not understand the state of the valve and would cause the utility to visit the premises in person
valve_opr_cmd_comm-err	DAP sends message to Utility back-office systems, of failure to communicate with the 2-Way Meter - Gas	na	L-L-L	Minimal harm to customer or organization for access to/disclosure of payload data as the payload data is tagged to a Meter ID not a customer account	Inaccurate command acknowledgements would cause the utility to not understand whether a valve was operated correctly	Not receiving the communication error payload to the command would cause the utility to not understand the state of the valve and would cause the utility to visit the premises in person
valve_opr_fail_cmd-err	2-Way Meter - Gas sends message to Utility back-office systems, of failure to perform/complete the valve operate command	na	L-M-L	Minimal harm to customer or organization for access to/disclosure of payload data as the payload data is tagged to a Meter ID not a customer account	Inaccurate command parameters associated to a meter would lead to incorrect service valve operation, and potential serious (eg Gas leak) harm to customer or potentially severe harm to customer and/or Utility (if in-scale)	Not receiving this message may cause a utility to not understand business value of reducing visits to a customers premises
valve_post-oper-info_resp-data	2-Way Gas meter sends message to Utility back-office systems, of the state of the 2-Way Meter - Gas	na	L-L-L	Minimal harm to customer or organization for access to/disclosure of payload data as the payload data is tagged to a Meter ID not a customer account	Inaccurate valve state payloads would cause the utility to not understand whether a valve was operated correctly	Not receiving the response payload to the command would cause the utility to not understand the state of the valve and would cause the utility to visit the premises in person
valve_state_cmd	CIS/Billing Utiltiy sends a get valve state command to 2-Way gas meter	na	L-L-L	Minimal harm to customer or organization for access to/disclosure of payload data as the payload data is tagged to a Meter ID not a customer account	Inaccurate valve state payloads would cause the utility to not understand whether a valve was operated correctly	Not receiving the response payload to the command would cause the utility to not understand the state of the valve and would cause the utility to visit the premises in person
valve_state_cmd_resp-data	2-Way Meter - Gas sends message to Utility back-office systems, of the position of the valve	na	L-L-L	Minimal harm to customer or organization for access to/disclosure of payload data as the payload data is tagged to a Meter ID not a customer account	Inaccurate valve state payloads would cause the utility to not understand whether a valve was operated correctly	Not receiving the response payload to the command would cause the utility to not understand the state of the valve and would cause the utility to visit the premises in person

5.14.4 Scenarios

5.14.4.1 Scenario: Utility/Operator sends a service switch operation command to an Electric Meter

Narrative

The Utility/Operator in this scenario sends an open or closed command to the Electric Meter Service Switch. The Electric Meter is expected to send an acknowledgement of the command to the Utility/Operator that requested the operation.

Business Objectives

Payload Name	Payload Type	Payload Attributes	PAP02 Baseload (routine)	PAP02 Highload (full load)	Originating Actor	Destination Actor	Reliability	Latency	When	How Often	Payload Size
SW_opr_cmd	cmd	Meter ID, command code	X	X	CIS/Billing - Utility	2-Way Meter - Electr	> 98%	< 1 min	8AM - 8PM	1-50 per 1000 per | ElectrMtr per | day,1-50 per 1000 per | Utl-PrePay-ElectrMtr per | day	25
SW_opr_cmd_ack	ack	Meter ID, acknowledgement code	X	X	2-Way Meter - Electr	CIS/Billing - Utility, MDMS	> 98%	< 2 min,< 1 min	8AM - 8PM	1-2 per 1000 per | ElectrMtr per | day,1-2 per 1000 per | PrePay-ElectrMtr per | day	25

5.14.4.2 Scenario: Utility/Operator cancels a service switch operation command to an Electric Meter

Narrative

The Utility/Operator in this scenario cancels an open or closed command to the Electric Meter Service Switch. The Electric Meter is expected to send an acknowledgement of the command to the Utility/Operator that requested the cancelation.

Business Objectives

Payload Name	Payload Type	Payload Attributes	PAP02 Baseload (routine)	PAP02 Highload (full load)	Originating Actor	Destination Actor	Reliability	Latency	When	How Often	Payload Size
SW_opr_cancel_cmd	cmd	Meter ID, command code	X	X	CIS/Billing - Utility	2-Way Meter - Electr	> 98%	< 1 min	8AM - 8PM	1-2 per 1000 per | ElectrMtr per | day,1-2 per 1000 per | Utl-PrePay-ElectrMtr per | day	25
SW_opr_cmd_ack	ack	Meter ID, acknowledgement code	X	X	2-Way Meter - Electr	CIS/Billing - Utility, MDMS	> 98%	< 2 min,< 1 min	8AM - 8PM	1-2 per 1000 per | ElectrMtr per | day,1-2 per 1000 per | PrePay-ElectrMtr per | day	25

5.14.4.3 Scenario: Utility/Operator requests the operational state of an Electric Meter service switch

Narrative

The Utility/Operator in this scenario needs to confirm the operational state (open or closed) of the Electric Meter Service Switch.

Business Objectives

Payload Name	Payload Type	Payload Attributes	PAP02 Baseload (routine)	PAP02 Highload (full load)	Originating Actor	Destination Actor	Reliability	Latency	When	How Often	Payload Size
SW_state_cmd	cmd	Meter ID, command code	X	X	CIS/Billing - Utility	2-Way Meter - Electr	> 98%	< 1 min	8AM - 8PM	1-50 per 1000 per | ElectrMtr per | day,1-50 per 1000 per | Utl-PrePay-ElectrMtr per | day	25
SW_state_cmd_resp-data	resp-data	Meter ID, response data (SW state, voltage, amps)	X	X	2-Way Meter - Electr	CIS/Billing - Utility, MDMS, LMS - Utility, DSM - Utility	> 98%	< 1 min	8AM - 8PM	1 per 1000 per | ElectrMtr per | day,1 per 1000 per | PrePay-ElectrMtr per | day	100

5.14.4.4 Scenario: Electric Meter Service Switch communication or operation failure

Narrative

When communication errors occur during communication of Electric Meter Switch Operation commands or the operation of the Electric Service switch occur, the Utility/Operator is expected to be made aware of the failure.

Business Objectives

Payload Name	Payload Type	Payload Attributes	PAP02 Baseload (routine)	PAP02 Highload (full load)	Originating Actor	Destination Actor	Reliability	Latency	When	How Often	Payload Size
SW_opr_cmd_comm-err	comm-err	Meter ID, failure code, sending device ID	X	X	DAPjm,AMI Head-End(j)	CIS/Billing - Utility, MDMS, NMS,AMI Head-End(j), CIS, MDMS, NMS	> 99%,> 99.5%	< 1 min,< 5 sec,< 10 sec	8AM - 8PM	1-4 per 1000 per | DAPjm-ElectrMtr per | SW oper per day,1-4 per 1000 per | PrePay-ElectrMtr per | SW oper per day,1-4 per 1000 per | DAPjm-PrePay-ElectrMtr per | SW oper per day	50
SW_opr_fail_cmd-err	cmd-err	Meter ID, failure code,	X	X	2-Way Meter - Electr	CIS/Billing - Utility, MDMS	> 98%	< 2 min,< 1 min	8AM - 8PM	1 per 1000 per | ElectrMtr per | SW oper per day,1 per 1000 per | PrePay-ElectrMtr per | SW oper per day	50

5.14.4.5 Scenario: Electric Meter notifies the Utility/Operator that a state change has occurred with an Electric Meter service switch

Narrative

When changes to the operational state of an Electric Meter Service Switch occur whether in the field by utility crews or remotely via the AMI system, the Electric Meter is required to send notification of the change in Service Switch operational state.

Business Objectives

Payload Name	Payload Type	Payload Attributes	PAP02 Baseload (routine)	PAP02 Highload (full load)	Originating Actor	Destination Actor	Reliability	Latency	When	How Often	Payload Size
SW_post-oper-info_resp-data	resp-data	Meter ID, Meter oper extended data	X	X	2-Way Meter - Electr	CIS/Billing - Utility, MDMS	> 98%	< 1 min	8AM - 8PM	1-2 per 1000 per | ElectrMtr per | day,1-2 per 1000 per | PrePay-ElectrMtr per | day	100

5.14.4.6 Scenario: Utility/Operator sends a service switch operation command to a Water or Gas Service Valve

Narrative

The Utility/Operator in this scenario sends an open or close command to the Water or Gas Service Valve. The Water or Gas Service Valve is expected to send an acknowledgement of the command to the Utility/Operator that requested the operation.

Business Objectives

Payload Name	Payload Type	Payload Attributes	PAP02 Baseload (routine)	PAP02 Highload (full load)	Originating Actor	Destination Actor	Reliability	Latency	When	How Often	Payload Size
valve_opr_cmd	cmd	Meter ID, opr cmd, scheduled time	X	X	CIS/Billing - Utility	2-Way Meter - Gas	> 98%	< 1 min,< 2 min	8AM - 8PM	1-50 per 1000 per | GasMtr per | day,1-50 per 1000 per | Utl-PrePay-GasMtr per | day	25
valve_opr_cmd_ack	ack	Meter ID, acknowlwdgement code	X	X	2-Way Meter - Gas	CIS/Billing - Utility, MDMS	> 98%	< 2 min,< 1 min	8AM - 8PM	1-2 per 1000 per | GasMtr per | day,1-2 per 1000 per | PrePay-GasMtr per | day	25

5.14.4.7 Scenario: Utility/Operator cancels a service switch operation command to a Water or Gas Service Valve

Narrative

The Utility/Operator in this scenario cancels an open or close command to the Water or Gas Service Valve. The Water or Gas Service Valve is expected to send an acknowledgement of the command to the Utility/Operator that requested the cancelation.

Business Objectives

Payload Name	Payload Type	Payload Attributes	PAP02 Baseload (routine)	PAP02 Highload (full load)	Originating Actor	Destination Actor	Reliability	Latency	When	How Often	Payload Size
SW_opr_cancel_cmd	cmd	Meter ID, command code	X	X	CIS/Billing - Utility	2-Way Meter - Electr	> 98%	< 1 min	8AM - 8PM	1-2 per 1000 per | ElectrMtr per | day,1-2 per 1000 per | Utl-PrePay-ElectrMtr per | day	25
SW_opr_cmd_ack	ack	Meter ID, acknowledgement code	X	X	2-Way Meter - Electr	CIS/Billing - Utility, MDMS	> 98%	< 2 min,< 1 min	8AM - 8PM	1-2 per 1000 per | ElectrMtr per | day,1-2 per 1000 per | PrePay-ElectrMtr per | day	25

5.14.4.8 Scenario: Utility/Operator requests the operational state of a Water or Gas Service Valve

Narrative

The Utility/Operator in this scenario needs to confirm the operational state (open or closed) of the Water or Gas Service Valve.

Business Objectives

Payload Name	Payload Type	Payload Attributes	PAP02 Baseload (routine)	PAP02 Highload (full load)	Originating Actor	Destination Actor	Reliability	Latency	When	How Often	Payload Size
valve_state_cmd	cmd	Meter ID cmd code	X	X	CIS/Billing - Utility	2-Way Meter - Gas	> 98%	< 1 min	8AM - 8PM	1-50 per 1000 per | GasMtr per | day,1-50 per 1000 per | Utl-PrePay-GasMtr per | day	25
valve_state_cmd_resp-data	resp-data	Meter ID, device state values	X	X	2-Way Meter - Gas	CIS/Billing - Utility, MDMS	> 98%	< 3 min,< 1 min	8AM - 8PM	1 per 1000 per | GasMtr per | day,1 per 1000 per | PrePay-GasMtr per | day	100

5.14.4.9 Scenario: Water or Gas Service Valve communication or operation failure

Narrative

When communication errors occur during communication of Water or Gas Service Valve commands or the operation of the Water or Gas Service Valve occur, the Utility/Operator is expected to be made aware of the failure.

Business Objectives

Payload Name	Payload Type	Payload Attributes	PAP02 Baseload (routine)	PAP02 Highload (full load)	Originating Actor	Destination Actor	Reliability	Latency	When	How Often	Payload Size
valve_opr_cmd_comm-err	comm-err	Meter ID, err-code	X	X	DAPjm,AMI Head-End(j)	CIS/Billing - Utility, MDMS, NMS,AMI Head-End(j), CIS, MDMS, NMS	> 99%,> 99.5%	< 1 min,< 5 sec,< 10 sec	8AM - 8PM	1-4 per 1000 per | DAPjm-GasMtr per | valve close oper per day,1-4 per 1000 per | PrePay-GasMtr per | valve close oper per day,1-4 per 1000 per | DAPjm-PrePay-GasMtr per | valve close oper per day	50
valve_opr_fail_cmd-err	cmd-err	Meter ID, err-code	X	X	2-Way Meter - Gas	CIS/Billing - Utility, MDMS	> 98%	< 3 min,< 2 min	8AM - 8PM	1 per 1000 per | GasMtr per | valve close oper per day,1 per 1000 per | PrePay-GasMtr per | valve close oper per day	50

5.14.4.10 Scenario: Water or Gas Valve notifies the Utility/Operator that a state change has occurred with a Water or Gas Valve

Narrative

When changes to the operational state of a Water or Gas Valve occur whether in the field by utility crews or remotely via the AMI system, the Water or Gas Valve is required to send notification of the change in Valve operational state.

Business Objectives

Payload Name	Payload Type	Payload Attributes	PAP02 Baseload (routine)	PAP02 Highload (full load)	Originating Actor	Destination Actor	Reliability	Latency	When	How Often	Payload Size
SW_post-oper-info_resp-data	resp-data	Meter ID, Meter oper extended data	X	X	2-Way Meter - Electr	CIS/Billing - Utility, MDMS	> 98%	< 1 min	8AM - 8PM	1-2 per 1000 per | ElectrMtr per | day,1-2 per 1000 per | PrePay-ElectrMtr per | day	100

6 Deployment Profile Use Case and Payload Selection – Minimums and Dependencies

6.1 Third Party Service Provider Consideration

The following use cases require consideration of a Third Party Service Provider.

Use case name in the requirements Spreadsheet	Needs Consideration
Cust. Info / Msgn'ng	Yes
Field DA Maint - Centralized Control	No
Volt/VAR - Centralized Control	No
DSDR - Centralized Control	No
FCIR - Distr DAC, FCIR – DMS, FCIR - Regnl Distr DAC	No
Dispatch Distr. Cust. Storage	No
Islanded Distr. Cust. Storage	No
DR-DLC	Yes
PrePay	Yes
PHEV	Yes
Firmware / Program Update	No
Meter Reading	Yes
Meter Events	No
ORM	No
Premise Network Admin	Yes
Price	Yes
Service Switch	No

6.2 Use Case Dependencies

The following table shows the use case to use case dependencies.

Use case name in the requirements Spreadsheet	Prerequisite Use Case
Cust. Info / Msgn'ng	Meter Reading
Field DA Maint - Centralized Control	
Volt/VAR - Centralized Control	Field DA Maint – Centralized Control
DSDR - Centralized Control	Field DA Maint – Centralized Control, Volt/VAR – Centralized Control
FCIR - Distr DAC, FCIR – DMS, FCIR - Regnl Distr DAC	Field DA Maint – Centralized Control
Dispatch Distr. Cust. Storage	Field DA Maint – Centralized Control, Cust. Info / Msgn-ng, Meter Reading
Islanded Distr. Cust. Storage	Dispatch Distr. Cust. Storage, Field DA Maint – Centralized Control, Cust. Info / Msgn-ng, Meter Reading
DR-DLC	Cust. Info / Msgn'ng, Meter Reading
PrePay	Cust. Info / Msgn'ng, Service Switch, Meter Reading
PHEV	DR-DLC, Cust. Info / Msgn'ng, Meter Reading
Firmware / Program Update	
Meter Reading	
Meter Events	Meter Reading
ORM	Meter Events, Meter Reading
Premise Network Admin	
Price	DR-DLC
Service Switch	

7 Method for Adaptation of the Requirements Table Data to Specific Analysis Needs

When examining the detailed records of the Requirements Table, there are several decisions and selections the consumer of the Requirements Table must make. This section identifies a method for making most of those decisions and selections, and how to adapt the detailed quantified requirements into a form that can be extracted for input into non-telecommunication studies and analysis or further adapted for telecommunication traffic models or assessment tool. Refer to the "Frmwrk-Tool-Dtls-r1.0.xls" file located at

http://osgug.ucaiug.org/UtiliComm/Shared%20Documents/latest_release_deliverables

which is an example of applying these steps against the OpenSG SG Network Task Force Requirements Table Release 5.1 (with a few incremental requirements modifications) as input to the SGIP PAP02 Wireless Modeling Tool.

Note: Any statement of a solution being able to satisfy the SG Network Task Force Requirements must:

- Clearly document and state adherence to steps 1-4 at a minimum, with the implied adherence to section 6.1 qualifiers and declaration of which Deployment profile is being used (ref section 6.2)
- If the solution also includes the telecommunication networks or a portion thereof, then adherence to processes and steps comparable to steps 5-11 also need to be documented and declared.

The remainder of this section provides the detailed "How-To" instructions for Steps 1 – 11. The user of the Requirements Table and this method needs to perform the steps appropriate to the Smart Grid Deployment Profile of choice and as driven by the specific objectives and scope of their study/assessment.

7.1 General Steps - Regardless of study analysis intent

7.1.1 Mandatory Step 1

Select the Study/Analysis Deployment Profile (including endpoints, Use Cases, and payload requirement sets), to be extracted from the SG Network TF Requirements Table found in the "Deployment-Profiles" table in the SG Network TF SRS. NOTE: The example selections shown in the sections below are the choices that were made for Priority Action Plan 2.

7.1.1.1 Mandatory Step 1.A

Select the Deployment Profiles to be used to extract the requirements from the SG Network TF Requirements Table "Deployment-Profiles" table. Selections /decisions that need to be made include:

i) Selecting the correct profile for AMI. For example, the **ARHEMCdIW** profile (with REPs, with HAN via ESI-InMtr, CIS-Utl direct to AMI Head-End, AMI Head-End-Inter-ExtranetGW-WAN-DAP)

ii) Selecting the correct profile for distribution automation. For example the **DCSAfF** profile (Centralized Apps & statusing, D-SCADA app to Fdr-Line-Device&substation,AMI Head-End for comm device mgmt, SCADA-Wan-FAN gateway-fld- FDRDevice)

7.1.1.2 Mandatory Step 1.B

Select the endpoints and other qualifications/conditions. Selections /decisions that need to be made include:

i) Whether the Utility provides the wires connection to the Meter and transports any REP HAN traffic to the Customer HAN Devices via the Utility AMI Network and ESI in the electric meter for the REPs.

ii) Whether Electric, Gas, or Water meters communicate directly with the AMI Network or Gas & Water meters communicate with the HAN network.

iii) How many HAN devices maybe a participant in appropriate REP programs

iv) Whether the DAC in the substation is required for all Distribution Customer Storage uses cases

v) Whether the DAP and the FAN gateway actors are to be considered one and the same

This illustration on the next page shows reference architecture with the ARHEMCdIW and DCSAfF profiles selected.

Smart Grid Conceptual Actors / Data Flow Diagram – Cross Domain Network Focused – OpenSG / SG-Network TF

PAP2 R2 Profile
Ref# ARHEMCdIW + DCSAfF

DRAFT 09Aug2012
Base – file SG-NET-diagram-r5.2.vsd
page size: ANSI-D

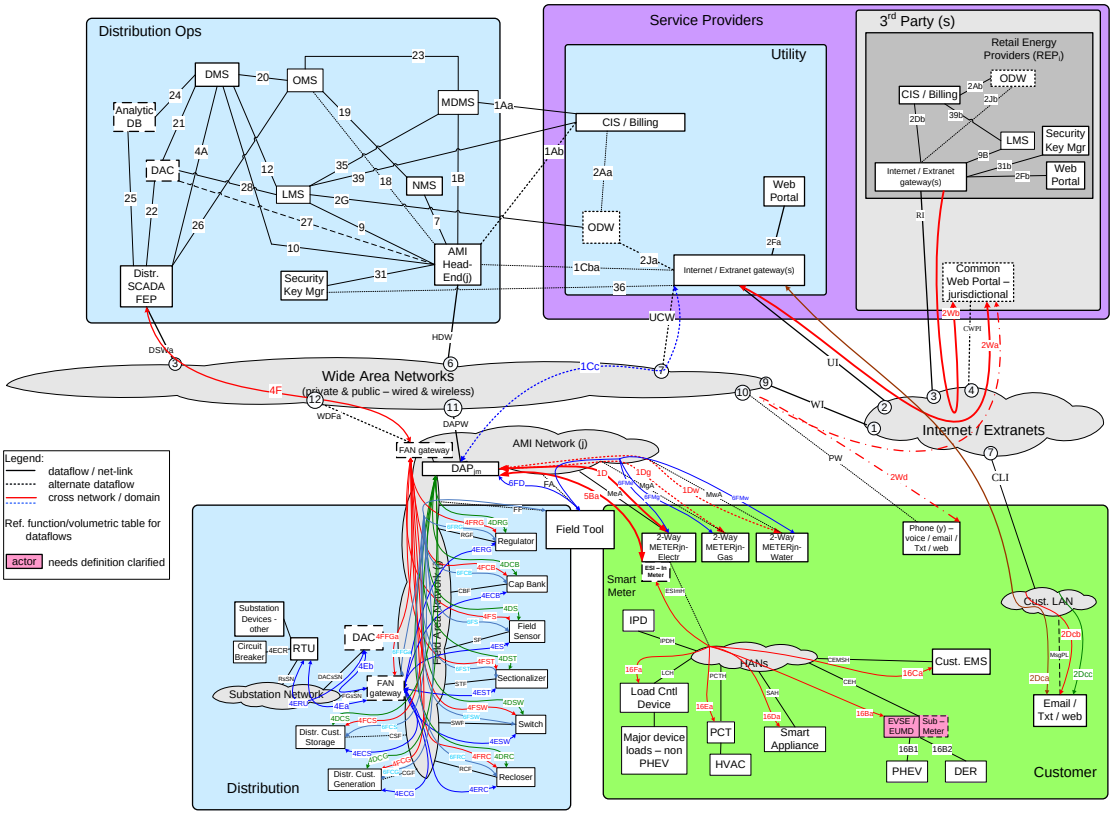

7.1.1.3 Mandatory Step 1.C

Determine what specific use-cases and payload requirement sets (ref parent rows in the Requirements Table**)**, to model that are appropriate to the Deployment Profile (as restricted by the deployment profile from step 1a & 1b and use case dependencies identified in the SG Network TF SRS). <u>Selections /decisions that need to be made:</u>

i) Use Cases in Play: Cust. Info / Msgn'ng; Dispatch Distr. Cust. Storage; DR-DLC; DSDR - Centralized Control; FCIR - DMS; Field DA Maint - Centralized Control; Firmware / Program Update; Islanded Distr. Cust. Storage; Meter Events; Meter Reading; ORM; PHEV; Premise Network Admin; PrePay; Price; Service Switch; Volt/VAR - Centralized Control

ii) Only the actors illustrated above are in play with these further restrictions: LMS - Utl in use for the Islanded Distr Cust. Storage, PHEV, Service Switch use cases and LMS - REPi in use for the DR-DLC and Price use cases

7.1.2 Mandatory Step 2

Identify which Requirements (Table or Database) payload requirement sets (parent rows and selected comm-paths) are in play based on selections and restrictions from step 1 above.

7.1.2.1 Mandatory Step 2.A Flag the Deployment Profile parent rows

Using the spreadsheet approach, create a copy (wip), of the full Requirement Table and append 1 column "Deployment Profile Use Case Payload Parents flag" to the "Reqmts-Combined" tab. Filter for parent rows and iterate through the filtered results for each in-scope use case, and place a flag entry in this newly added column.

7.1.2.2 Mandatory Step 2.B Flag the Deployment Profile' child (or parents with no children) rows

Using the Requirement Table (from step 2a), remove the parent row filter. Insert a working tab that contains a list of the interfaces and dataflows labels from the Deployment Profile Reference diagram and a child flag column that is populated with e.g. "x". Append 1 column "Deployment Profile comm-paths/rqmts flag" and enter a function that results in flagging those requirement rows that are an exact match to the Deployment Profile Ref Diagram e.g. use spreadsheet VLOOKUP function to flag the rows that match the interfaces & dataflows listed in that new tab.

7.1.2.3 Optional Step 2.C Identify the child's parent Rqmt Ref (used for back reference and audit purposes)

Using the Requirement Table (from step 2b), in a new tab or append columns to the tab added in 2b. Create a query in the Requirements Database that lists the child to parent Rqmt Ref pairings and copy/paste - those results into the new tab. Append 1 column to the Requirement Table "Child's Parent Rqmt Ref" and enter a function that results in showing the parent Rqmt Ref for that requirement rows parent e.g. use spreadsheet VLOOKUP function to list the parent Rqmt Ref that match the pairings listed in that new tab.

> ***Note: release 5.1 of the Requirements Database produces this child to parent pairing that is 95% correct (it's being corrected), but you will need to perform a validation check in the spreadsheet. The alternative to using the Requirements Database is to write a spreadsheet macro that accomplishes the same result.***

7.1.2.4 Mandatory Step 2.D Extract the Deployment Profile Requirements to a Separate Workspace

Using the spreadsheet approach, extract the requirement rows from the Requirements Table from steps 2b and optionally 2c above by filtering on the parent rows and the flagged child rows that satisfy the Deployment Profile and use case, payloads, comm-paths and endpoints selected and save the results in a Deployment Profile analysis spreadsheet to reduce the working size of the spreadsheet versus always working with the full SG Network Requirements Table. Copy this spreadsheet to the "Payloads" tab as it will be used in further steps.

> *The alternative to this is to delete all of the contents of this spreadsheet as the results of steps 2a,b,c that are outside the scope of the specific Study/Analysis Deployment Profile set of requirements.*

The spreadsheet resulting from step 2d is one that is used for Steps 3-4 below. Step 5 will further reduce this set of Study/Analysis Deployment Profile requirements rows set down to just those specific to the PAP02 specific interface/dataflow(s) for processing and input into the wireless model.

7.1.3 Mandatory Step 3

Select values for the documented non-functional metrics where ranges or unspecified parameters (variables) are identified in the Requirements tab, specific to your business requirements. Optionally, modify the other fixed/specified metrics to your business requirements. These selections include:

ii. **How Often** - the range value selection and declaring unspecified parameters (variables) for this column is addressed in step 4c

iii. **Business App Payload Latency** - use the Requirement Table (from step 2), append 1 column to the Requirements tab for "App Payload Latency (sec)", copy/modify just the numeric value from the contents of the existing column M latency and enter a numeric value in seconds for those that were documented as a range.

iv. **App Payload Size** - use the Requirement Table (from step 3a), append 1 column to the Requirements tab for "App Payload Size (bytes)", copy/modify just the numeric value from the contents of the existing column N payload size and enter a numeric value in bytes for those that were documented as a range.

v. **Daily Clock Period Factor for Specific Hour** - use the Requirement Table (from step 3b), append 1 column to the Requirements tab for a multiplication factor to translate the primary period of a day down to a specific hour of the day. Note: if the intent is to deal with the whole 24 hr day and not focus on any particular hour, then enter "1" for the cells in this column.). <u>Selections /decisions made:</u>

Focus is on the **5pm hour**: If the requirement rows Daily Clock Periods of Primary Occurrence is outside the hour of study, then **enter a zero "0"**, otherwise enter the calculation **(1 / (number of hours in daily primary clock periods))** for that requirement row.

7.1.4 Mandatory Step 4

Scale the non-functional app payload metrics in the Requirements tab specific to the study/analysis deployment characteristics

7.1.4.1 Mandatory Step 4.A Set the multiple actor and payload multipliers

Several of the child row From and To actor pairs have one to many or many to one actor payload requirement sets, this step will account for those multiple flows as driven by the Data Flow Ref pseudo code. Use the Requirement Table (from step 3), then append 1 column to the Requirements tab for "Rqmt Row Multiple Actor multiplier - max**".** NOTE: If there is only one payload being moved between the From-To actor pairs, enter "1", otherwise determine the maximum number of payloads per the stated From and To pairing and enter that value. An example of this selection is shown below:

e.g. for Data Flow Ref PNA-355 ESI - In Meter shall be able to process & forward HAN device join request acknowledgements to DAPjm. The Maximum “Rqmt row multiple actor multiplier” field should be set to the number of HAN devices to be used in this model (e.g. EMS, IPD, PCT,etc.)

7.1.4.2 Mandatory Step 4.B Set the How Often Actor Quantities

This step will set “How Often” fields with the specific values for a particular implementation. For example, how often a utility performs “On-Demand” meter reads can be configured in this step. The SG-Network value default value for “On-Demand” gas meter reads is “25 per 1000 per | GasMtr per | day”.

Using the Requirement Table (from step 4a), append 2 columns to the Requirements tab for the" How Often Actor Quantity Qualifier/Conditional" AND the "Actor qty root". Parse that row's How Often content using the following function for the "Actor qty qualifiers" value:

```
MID(K287,FIND("|",K287)+2,(FIND("|",K287,FIND("|",K287)+1)-FIND("|",K287)-7
```

Refer to the Requirements Table "HowOften-abbrev-xref" tab to decode the actor name abbreviations.

For the "Actor qty root" values, the selection of the root actor for intermediary actors is driven by the payload requirements sets originating source actor and in some instances

that actor may be a generic name such as HAN Device(s). In these conditions, use of the general root actor name is acceptable provided that the "Rqmt Row multi Actor multiplier - max" value is also entered for that requirement row and accounting for those potential multiple payload flows. Selections /decisions made:

> e.g. for Data Flow Ref PNA-355, the qualified/conditional actor name is **"ESIInMtr-with-HANdevice-REPi-join"** and the root actor name is **"ESIInMtr"** which is a derivative of the **"ElectrMtr"**

7.1.4.3 Mandatory Step 4.C Create a Pivot Table of the Actor Quantities

Once all the How Often Actor quantity qualifiers and root names are entered, create a pivot/datapilot of those columns with row type as the column and store the unique values in a new tab (e.g. "3-Actor-Qtys"), to the spreadsheet that will be used in a step 4e. Copy and group within that same tab, the unique conditional/qualified & root actors that make logical sense (e.g. all entries associated to the different endpoints or program HAN device payloads). Include additional input parameters as required for that logical sub-groupings e.g. % of a specific endpoint under specific conditions that gets applied to the total (or sub-category) of the specific root actor, that is to be used as the conditional/qualified actor quantity in other spreadsheet calculations. Populate the specific root actor' quantity into the appropriate cells and set the formulas as needed for scaling of the root actor quantities to the specifics of the qualified/conditional actors (excluding the "Rqmt Row multi Actor multiplier", which is handled separately in step 4e). Selections /decisions made:

> e.g. see tab **"3-Actor-Qtys"**, which includes the links to the SG-Networ-PAP02 modeling tool tabs **"1-USA-states"** and **"2-Model-area"** tabs along with additional parsing and scaling parameters
>
> *Optionally, the default set of Model-Area endpoint Actor quantities from the SG-Networ-PAP02 modeling tool tabs "1-USA-states" and "2-Model-area" can be linked into the "3-Actor-Qtys" tab cells as the default populated specific root actor quantities and modified as per the study/analysis deployment characteristics to parse out the Conditional/Qualified Actor quantities and the non-functional requirement volumetrics.*

7.1.4.4 Mandatory Step 4.D Set Payload Frequency Metric

In order to set the Payload Frequency metric per unit of time per How Often conditional/qualified Actor, use the Requirement Table (from step 4b), append 1 column to the Requirements tab for "Payload frequency metric per unit of time per qualified/conditional actor", a multiplication factor, that when multiplied by the qualified/conditional actor quantities, results in the number of the application payloads

being transported over the data flow/interface for that specific From-To requirement row per unit of time. This multiplication factor accounts for the following factors:

i) making “How Often” range value selections and declaring unspecified parameters (variables);

ii) the Daily Clock Period Factor for Specific Hour factor;

iii) Multiple actor payloads multiplier for shared child row data flows /interfaces factor. Selections /decisions made:

for Data Flow Ref PNA-355, the calculation for a time period of hour at 5pm is [(1/365) * (Daily Clock Period Factor for Specific Hour factor) * (Multiple actor payloads multiplier)]

7.1.4.5 Mandatory Step 4.E Set Conditional/Qualified Actor Quantities

In order to set the Conditional/Qualified Actor Quantities, use the Requirement Table (from step-answer 4d), append 1 column to the "Reqmts-Combined" tab for the Conditional/Qualified Actor Quantities. Link the specific child row's Conditional/Qualified Actor Quantities cell to the same Conditional/Qualified Actor Quantity cell in the tab from the result of step 4c. Selections /decisions made:

for Data Flow Ref PNA-355, **“ESIInMtr-with-HANdevice-REPi-join”** qualified actor quantity is **2,298,500** for the PAP02 Wireless Model Area total count of **“ElectrMtr”**

7.1.5 Additional Steps for General Telecomm Traffic modeling

7.1.5.1 Mandatory Step 5 Select which application payload data flow (may include interfaces) are to be studied/analyzed.

Using the spreadsheet approach, use the Requirement Table (from step 4), insert a working tab that contains a list of the interfaces and dataflows labels (see below) in this step and a rqmt flag column that is populated with e.g. "x". Append 1 column to the "Reqmts-Combined" tab "PAP02 wireless modeling rqmt flag" and enter a function that results in flagging those requirement rows that are an exact match to the interfaces and dataflows listed in the inserted working tab e.g. use spreadsheet VLOOKUP function to flag the rows that match the interfaces & dataflows listed in that new tab. Filter the resultant modified "Reqmts-Combined" tab for non-blank "PAP02 wireless modeling rqmt flag" entries and save this into a separate spreadsheet specific to the PAP02 interfaces/dataflows deployment profile modeling needs. Results:

Focus on the payload traffic of the DAP/FAN gatway - field between FAN & AMI Network Endpoint Actors specific to the use case payloads per the

Deployment Profile in (1) e.g. all of the following data flows and interfaces, not just a single interface like MeA.

- **Interfaces**: MeA, MgA, MwA, FA, FF, RGF, CBF,SF, STF, SWF, RCF, CGF, CSF
- **Dataflows**: 1D, 1Dg, 1Dw, 5Ba, 6Me, 6Mg, 6Mw, 6FD, 4DRG, 4DCB, 4DS, 4DST, 4DSW, 4DRC, 4DCG, 4DCS, 4ECS, 4DS, 4FST, 4FSW, 4FRC, 4FCG, 4FFGa, 6FRG, 6FCB, 6FS, 6FST, 6FSW, 6FRC, 6FCG, 6FCS, 6FFGa

7.1.5.2 Mandatory Step 6 Determine Uplink and Downlink designations

For Wireless traffic modeling needs, determine and specify the wireless "Uplink" and "Downlink" designation for the requirement rows. Using the spreadsheet approach, use the Requirement Table from step 5:

i. Append 1 column to the "Reqmts-Combined" tab for **"Uplink or Downlink"** value entries for each requirement row. Enter in that Uplink or Downlink flag e.g. "up" or "down" based on your assessment needs.

ii. For From-To payloads that are from one endpoint to another endpoint across a network cloud where the technology being studied/analyzed requires the endpoints must communicate to another endpoint via a DAP (basestation) versus peer-to-peer:

(1) append 1 column to the "Reqmts-Combined" tab for "endpoint to endpoint comm payload flag" and enter a flag value of e.g. "x"
(2) append 1 column to the "Reqmts-Combined" tab for "endpoint to endpoint payload latency link factor" and enter a value of "0.5" as the original business application patency is now being split between two interfaces
(3) insert a copy of that each requirement row that satisfies this condition and code one of the rows as the downlink and the other as uplink. <u>Results:</u> e.g. For traffic from DAP to endpoint flag as Downlink; for payloads from endpoint to DAP flag as Uplink

7.1.5.3 Mandatory Step 7

Tag the use case payloads requirement rows as being Baseload or Highload and create the associated Payload Frequency metric per unit of time per Qualified Actor Qty.
NOTE: SG-Network has already performed this step and the user is welcome to change these values as desired.

i. Using the spreadsheet approach, the Requirement Table from step 6, append 2 columns to the "Reqmts-Combined" tab for **"baseload" and "highload" flags**. Enter an "X" into the column cells for those use case payloads that are to be considered as baseload (routine and nominal conditions payloads present) and/or

as highload (occurs in periods of heavy activity periods of time e.g. storm outage periods, new program/rates service calls. Results:

Note: if a use case payload requirement set is not applicable to the baseload or highload category the cell entries must be null.

ii. Using the spreadsheet approach, the Requirement Table from step 7a, decompose those "Actor qty qualifiers" quantities in tab "3-Actor-Qtys" that have quantities or occurrence frequencies that differ between baseload to high load conditions and specify the parameters for those conditions. Results:

e.g. for Data Flow Ref PNA-355, it's "Actor qty qualifier" of "ESIInMtr-with-HANdevice-REPi-join" parameters in tab "3-Actor-Qtys" indicates: 5% of those devices per year is the baseload amount and the highload varies from 15-30%

iii. Using the spreadsheet approach, the Requirement Table from step 7b, append 2 columns to the “Reqmts-Combined” tab for “baseload” and “highload” Payload Frequency metric per unit of time per qualified Actor. Note: these 2 columns can be a replacement of or additional to the “Payload Frequency metric per unit of time per How Often conditional/qualified Actor” column inserted via step 4d above. The calculation is basically the same as in 4d but with these following changes:

i) if the baseload or highload flags from step 7a are null, then so is the entry in these two additional columns

ii) the baseload and highload parameters (not the quantities) from step 7b that apply, are also to be applied to those applicable rows later in steps 10bi and 10bii, NOT in this step. Results:

e.g. for Data Flow Ref PNA-355, the calculation for a time period of hour at 5pm is [(1/365) * (Daily Clock Period Factor for Specific Hour factor) * (Multiple actor payloads multiplier)] for the baseload frequency metric and is [(1/365) * (Daily Clock Period Factor for Specific Hour factor) * (Multiple actor payloads multiplier)] for the highload frequency metric as the baseload and highload flags are not null.

7.1.5.4 Mandatory Step 8

Specify the differences between Application Payload versus Application Packet Size and Latency values.

i. Using the spreadsheet approach, the Requirement Table from step 7, append 2 columns to the “Reqmts-Combined” tab for “number of packets” per app payload and “packet latency (sec)”. Specify a variable for telecomm application packet size in bytes. Note: the application packet size is just the application portion of the telecomm packet that gets transmitted across the media and must be accounted for.

ii. in the rows' “number of packets” cell, enter the calculation [Roundup(payload size bytes) / (telecomm application packet size bytes))]

iii. for those rows that the "endpoint to endpoint comm payload flag" is not null, change the "payload latency (sec)" cell entry to [(previously entered "payload latency" value from step 3b) * ("endpoint to endpoint payload latency link factor")]

iv. in the rows' "packet latency (sec)" cell enter the results of the calculation [("payload latency") / ("number of packets")]. Results:

e.g. For an application packet portion size of 512 bytes, for Data Flow Ref FPU-0198, the calculations are as follows:

i) in the rows' "number of packets" cell, [roundup((50000) / (512))] = 98
ii) the "endpoint to endpoint comm payload flag" is not null, the "payload latency (sec)" cell entry changed to [(60) * (0.5)] = 30
iii) in the rows' "packet latency (sec)" cell, [(30) / (98)] = 0.31

7.1.6 SGIP PAP02 Wireless Modeling

7.1.6.1 Mandatory Step 9 Seeding the DAP Quantities after 1st run of PAP02 wireless propagation lose model

Note: Depending upon the amount and characteristics of the other non-DAP focused payloads, the following step may not be necessary.

The type of Study/Analysis that is used in the PAP02 Wireless Model is such that the quantity of the DAPs for a given study area is an output of the model, but the model also needs all network traffic input into the model. To address this input need, the quantity of DAPs is initially seeded into tab "3-Actor-Qtys" and factored into those requirement rows in tab "4-SG-Net-Rqmts-DAP-endpts" as required. After the first execution of the PAP02 Wireless model for a specific set of wireless standard and representative technology and spectrum, the number of calculated DAPs needs to be used to replace those initial seed values placed into tab "3-Actor-Qtys". Then a 2nd execution of the PAP02 Wireless Model is run, resulting in a closer to steady state for the number of DAPs.

a) Using the spreadsheet approach, the Requirement Table from step 8, append 2 rows to the “3-Actor-Qtys” tab just above the DAP quantity row with row headings “parm for DAPs qty - #endpoints per DAPjm” and “parm for DAPs qty - sq-miles per DAPjm”.

i) for row “parm for DAPs qty - #endpoints per DAPjm” in the appropriate row cell(s) enter the nominal number of endpoints that the DAPjm can support
ii) for row “parm for DAPs qty - sq-miles per DAPjm” in the appropriate row cell(s) enter the nominal area in sq-miles that the DAPjm can adequately cover.

b) Modify the DAPjm quantity row in the "3-Actor-Qtys" tab to read "DAPjm (greater of #endpoints or sq-miles per DAP) - optionally seed qty for PAP02 Wireless modeling". Replace the cell quantities entry(s) in that row with:

[roundup(the greater of ((total endpoint qty) / ("#endpoints per DAP) | (total study area sq-miles) / (sq-miles per DAP))]

<u>Results:</u>
e.g. For a study/analysis area with total of 250,000 endpoints and 230 sq miles AND using parms of 5,000 endpoints per DAP and 3 sq-miles per DAP, the number of DAPs is 77 (seed qty)

7.1.6.2 Mandatory Step 10 Volumetric Calculations

Wireless Modeling - Input of SG Network Requirements non-Functional Volumetrics – Calculations

This step processes the results from the previous steps and is part 1 of a 2 part sequence to extract & transform the SG Network Requirements for input to a Wireless Modeling Tool. Using the spreadsheet approach and the Requirement Table from step 9, append 14 columns to the "4-SG-Net-Rqmts-DAP-endpts" tab as specified below. All of these columns are qualified as baseload or highload.

a) Bring forward the Study/Analysis area "sq-miles" value from tab "2-model-area" to this tab. *Alternatively, this value may be input in this tab assuming that all of the actor quantities in tab "3-Actor-Qtys" have had their link to tab "2-model-area" broken that are calculated based on the sg-mile values in tab "2-model-area" and replaced with manually input values.*

b) Qualify each of the columns headers and row calculation cell references below as being baseload or highload. If the baseload or highload columns flags are null from step 7a, then the corresponding cell entries for the calculations below are also null.

   i) Column “baseload payload rate #/sec” - enter calculation [(“baseload frequency metric per sec during time period per qualified Actor “ from step 7c) * (“Qualified Actor Qty” from step 4e)].

   Note, if the baseload parameter from step 7c needs to be applied, then the calculation is [(“baseload frequency metric per sec during time period per qualified Actor “ from step 7c) * (“Qualified Actor Qty” from step 4e) * (“baseload quantity factor”, from step 7b and 7c)].

   ii) Column “highload payload rate #/sec” - enter calculation [(“highload frequency metric per sec during time period per qualified Actor “ from step 7c) * (“Qualified Actor Qty” from step 4e)].

iii) Note: If the baseload parameter from step 7c needs to be applied, then the calculation is [("highload frequency metric per sec during time period per qualified Actor " from step 7c) * ("Qualified Actor Qty" from step 4e) * ("highload quantity factor", from step 7b and 7c)].

iv) column "baseload packet rate #/sec" - enter calculation [("baseload payload rate #/sec" from step 10bi) * ("number of packets" from step 8a)]

v) column "highload packet rate #/sec" - enter calculation [("highload payload rate #/sec" from step 10bii) * ("number of packets" from step 8a)]

vi) column "baseload MBps /sq-mi" - enter calculation [("baseload payload rate / sec" from step 10bi) * ("payload size bytes" from step 3c) / (1,000,000) / ("study/analysis area sg-miles" from step 10a)]

vii) column "highload MBps /sq-mi" - enter calculation [("highload payload rate / sec" from step 10bi) * ("payload size bytes" from step 3c) / (1,000,000) / ("study/analysis area sg-miles" from step 10a)]

viii) column "baseload payload size bytes - partial calc" - enter calculation [("baseload payload rate / sec" from step 10bi) * ("payload size bytes" from step 3c)]

ix) column "highload payload size bytes - partial calc" - enter calculation [("highload payload rate / sec" from step 10bii) * ("payload size bytes" from step 3c)]

x) column "baseload packet size bytes - variable packet size - partial calc" - enter calculation [IF(("payload size bytes" from step 3c) > ("telecomm application packet size" from step 8a) , ("telecomm application packet size" from step 8a) , ("payload size bytes" from step 3c)) * ("baseload packet rate / sec" from step 10biii)]

xi) column "highload packet size bytes - variable packet size - partial calc" - enter calculation [IF(("payload size bytes" from step 3c) > ("telecomm application packet size" from step 8a) , ("telecomm application packet size" from step 8a) , ("payload size bytes" from step 3c)) * ("highload packet rate / sec" from step 10biv)]

xii) column "baseload payload latency sec - partial calc" - enter calculation [("baseload payload rate / sec" from step 10bi) * ("payload latency (sec)" from step 8c)]

xiii) column “highload payload latency sec - partial calc” - enter calculation [(“highload payload rate / sec” from step 10bii) * (“payload latency (sec)” from step 8c)]

xiv) column “baseload packet latency sec - partial calc” - enter calculation [(“baseload packet rate / sec” from step 10biii) * (“packet latency (sec)” from step 8d)]

xv) column “highload packet latency sec - partial calc” - enter calculation [(“highload packet rate / sec” from step 10biv) * (“packet latency (sec)” from step 8d)]

7.1.6.3 Mandatory Step 11 – Applying SG-Network Volumetric Requirements Calculations

This step completes the calculations and further processes the results from the step 10 to extract & transform the SG Network Requirements for input to a Wireless Modeling Tool e.g. PAP02 Wireless Modeling Tool. The input parameters coming from the SG Network Requirements for use by the PAP02 Wireless Modeling Tool are categorized as follows:

- RF Propagation Path Loss - Calculating the number of DAPs required to provide coverage for the data volume across the geographic area that contain the endpoints:
  - MBps per sq-mile [(baseload or highload) & (uplink or downlink) traffic]
  - study/analysis area (sq-miles)
  - number of endpoints in the study/analysis area

- Payload Latency Rqmts - Calculating the number of endpoints that a DAP can support at a specific probability of satisfying the latency requirements [(baseload or highload) & (uplink or downlink) traffic]:
  - Message Rate #/s (Rmsg)
  - Avg time between Message sec (Tmsg = 1/Rmsg)
  - Avg app packet (without overheads) size bytes (Pavg)
  - Single Network Link Latency sec (L) from [avg or manual input or minimum] app packet latency
  - Probability that msg event falls within latency window (Pmsg = L/Tmsg) from [avg or manual input or minimum] app packet latency"

7.1.6.3.1 Mandatory Step 11.A

Using the spreadsheet approach and the Requirement Table from step 10

i) insert a new tab labeled e.g. “5-SGNet-summarized-inputs” and append 3 columns with headings: “Metric”; “baseload”; “highload”

ii) insert 2 rows above the column headings row and
(1) bring forward the Study/Analysis area “sq-miles” value from step 10a

(2) sum up the number of unique endpoints from tab “3-Actor-Qtys” e.g. insert another column “endpoint count flag” to the left of the quantity column(s) and flag those specific root actors that if summed would be the total of all the study/analysis actors. Use the calculation spreadsheet function SUMIF to sum the quantities where the “endpoint count flag” is not null.

7.1.6.3.2 Mandatory Step 11.B

RF Propagation Path Loss inputs - Using the spreadsheet approach and the Requirement Table from step 10a, insert 2 rows below the header row of the “5-SGNet-summarized-inputs” tab for the “MBps/sq-mile - Uplink” and “MBps/sq-mile - Downlink” For the baseload uplink cell calculation e.g. use SUMIF function against tab “4-SG-Net-Rqmts-DAP-endpts” to sum the “baseload MBps /sq-mi” values where “uplink / downlink” value is “up”.

Repeat this step by changing the parameters in the calculation for the other combinations of baseload/highload and uplink/downlink for “MBps/sq-mile” cell entries.

7.1.6.3.3 Mandatory Step 11.C

Application Packet Latency Requirements Inputs - Part 1 - Some additional calculations on the tab “4-SG-Net-Rqmts-DAP-endpts” content are necessary for further processing by step 11d for the application packet latency PAP02 parameter inputs. Using the spreadsheet approach and the Requirement Table from step 10b, insert rows as specified below.

Note: Additional information metrics can be calculated but the ones specified below are the minimum set for step 11d; all of the intermediate calculation rows below are parsed for baseload/highload and concurrently uplink/downlink traffic. Only the baseload-uplink calculations are specified. Repeat the specified row and cells calculations by substituting the “base” and “up” text references with the other combinations of base/high and up/down.

i) row header “App Packet Rate #/sec (Uplink)” - in the “baseload” column - enter calculation e.g. use SUMIF function against tab “4-SG-Net-Rqmts-DAP-endpts” to sum the “baseload packet rate / sec” values where “uplink / downlink” value is “up”

ii) row header “Avg time between App packet arrivals sec (Uplink)”, in the “baseload” column - enter calculation [1 / (“App Packet Rate #/sec (Uplink)” - in the “baseload” column from step 11ci)]

iii) row header “Avg application Payload Size bytes, without overheads (Uplink)”, - in the “baseload” column - enter calculation on tab “4-SG-Net-Rqmts-DAP-endpts” data e.g. [IF((“Telecom Packet size type” = “fixed” THEN set (“Avg application Payload Size bytes, without overheads

(Uplink)”) = (“Telecomm app packet size bytes (non overhead)”), ELSE (use SUMIF function to sum the “baseload packet size bytes - variable packet size - partial calc” values where “uplink / downlink” value is “up”) / (use SUMIF function to sum the “baseload packet rate #/sec” values where “uplink / downlink” value is “up”))].

Notes: 1) This requires inclusion of the “Telecomm app packet size type” as a variable into the “5-SGNET-summarized-inputs” tab; b) this calculation is the weighted average method which is a close approximation to arithmetic average in this situation.

iv) row header “Avg app Payload Latency sec (Uplink)”, in the “baseload” column - enter calculation on tab “4-SG-Net-Rqmts-DAP-endpts” data e.g. [(use SUMIF function to sum the “baseload packet latency sec - partial calc” values where “uplink / downlink” value is “up”) / (use SUMIF function to sum the “baseload packet rate #/sec” values where “uplink / downlink” value is “up”)]. Note: this calculation is the weighted average method which is a close approximation to arithmetic average.

v) row header “Minimum app Packet Latency sec (Uplink)”, in the “baseload” column - enter calculation on tab “4-SG-Net-Rqmts-DAP-endpts” data e.g. [(use the DMIN function to report the “Packet latency (sec)” minimum values per the query conditions: “baseload” = “X”; “uplink / downlin” = “up”; “Qualified Actor Qty” >0.

Note: these query conditions are encoded into the “4-SG-Net-Rqmts-DAP-endpts” tab in rows added above the column headers inserted from step 10

7.1.6.3.4 Mandatory Step 11.D

Application Packet Latency Requirements Inputs - Part 2 - Process the calculations from step 11c as those required for input into the PAP02 Wireless Modeling Tool.Using the spreadsheet approach and the Requirement Table from step 11c, insert rows as specified below.

Note: all of the calculation rows below are parsed for baseload/highload and concurrently uplink/downlink traffic. Only the baseload-uplink calculations are specified. Repeat the specified row and cells calculations by substituting the “base” and “up” text references with the other combinations of base/high and up/down.

i) row sub-section section header “Latency Rqmts calculation parameters (on an endpoint-packet perspective) Uplink”

ii) row header “Avg time between Message sec (Tmsg = 1/Rmsg)” - in the “baseload” column - enter calculation [(“App Packet Rate #/s (Uplink)” from step 11ci) / “#endpoints” from 11aii)]

iii) row header “Avg time between App packet arrivals sec (Uplink)”, in the “baseload” column - enter calculation [1 / (“Avg time between Message sec (Tmsg = 1/Rmsg)” from step 11di)]

iv) row header “Avg app packet (without overheads) size bytes (Pavg)” , in the “baseload” column - enter calculation [(“Avg application Payload Size bytes, without overheads (Uplink)” from step 11ciii)]

v) row header “Single Network Link Latency sec (L) from avg bus packet latency”, in the “baseload” column - enter calculation [(“Avg app Payload Latency sec (Uplink)” from step 11civ) / (“anticipated #network links (hops) for DAPjm to endpoint” from step 11dix) * (1 - (“% of latency allocated to node processing” from step 11dviii))]

vi) row header “Single Network Link Latency sec (L) from manual bus packet latency input”, in the “baseload” column - enter calculation [(“DAPjm to endpoint network latency rqmts sec (manual input)” from step 11dvii) / (“anticipated #network links (hops) for DAPjm to endpoint” from step 11dix) * (1 - (“% of latency allocated to node processing” from step 11dviii))]

vii) row header “DAPjm to endpoint network latency rqmts sec (manual input)”, in the “baseload” column - enter a value

viii) row header “% of latency allocated to node processing”, in the “baseload” column - enter a value

ix) row header “anticipated #network links (hops) for DAPjm to endpoint”, in the “baseload” column - enter a value e.g. “1”

x) row header “Single Network Link Latency sec (L) from min bus packet latency”, in the “baseload” column - enter calculation [(“Minimum app Packet Latency sec (Uplink)” from step 11cv) / (“anticipated #network links (hops) for DAPjm to endpoint” from step 11dix) * (1 - (“% of latency allocated to node processing” from step 11dviii))]

xi) row header “probability that msg event falls within latency window (Pmsg = L/Tmsg) from avg bus packet latency”, in the “baseload” column - enter calculation [(“Single Network Link Latency sec (L) from avg bus packet latency” from step 11dv) / (“Avg time between Message sec (Tmsg = 1/Rmsg)” from step 11dii)]

xii) row header “probability that msg event falls within latency window (Pmsg = L/Tmsg) from manual input of bus packet latency”, in the “baseload” column

- enter calculation [("Single Network Link Latency sec (L) from manual bus packet latency input" from step 11dvi) / ("Avg time between Message sec (Tmsg = 1/Rmsg)" from step 11dii)]

xiii) row header "probability that msg event falls within latency window (Pmsg = L/Tmsg) from min bus packet latency", in the "baseload" column - enter calculation [("Single Network Link Latency sec (L) from min bus packet latency" from step 11dx) / ("Avg time between Message sec (Tmsg = 1/Rmsg)" from step 11dii)]

7.1.6.3.5 Mandatory Step 11.E

If the Study/Analysis is such that the deployment study/analysis area is decomposed into multiple sub-areas with differing demographics and characteristics (e.g. the PAP02 Wireless Assessment Framework and Modeling Tool), then additional changes to the following tabs are needed:

i) in "1-USA-states", "2-Model-area", and "3-Actor-Qtys" - add additional quantity/input parameter columns for each study/analysis area, to specify the differences between those sub-areas for the various qualified actors quantities

ii) "4-SG-Net-Rqmts-DAP-endpts" - repeat steps 4e, 10a, and 10b for each of those sub-areas

iii) "5-SGNet-summarized-inputs" - repeat steps 11a - 11d, excluding 11ciii for each of those sub-areas

8 Appendix

8.1 Acronyms and Abbreviations

Acronyms/Abbreviations	Description
AC	Alternating Current
AMI	Advanced Metering Infrastructure
AMS	Asset management system
ASAP-SG	Advanced Security Acceleration Project-Smart Grid
B2B	Business to Business
BAN	Business Area Network
CBC	Capacitor Bank Controller
CIA	Confidentiality Integrity Availability
CIM	Common Information Model.
CIP	Critical Infrastructure Protection
CIS	Customer Information System
CPP	Critical Peak Pricing
CSWG	Cyber Security Working Group
DA	Distribution Automation
DAC	Distribution Application Controller
DAP	Data Aggregation Point
DC	Direct Current
DER	Distributed Energy Resources e.g. solar, wind, photovoltaic
DHS	Department of Homeland Security
DMS	Distribution Management System
DNP	Distributed Network Protocol
DOE	Department of Energy
DOMA	Distribution Operations Model and Analysis
DR	Demand Response
DRLC	Demand Response Load Control
DSDR	Distribution Systems Demand Response
DSM	Demand Side Management
EMS	Energy Management System
EPRI	Electric Power Research Institute
ES	Electric Storage
ESB	Enterprise Service Bus
ESI	Energy Services Interface
ET	Electric Transportation
EUMD	End Use Measurement Device
EV/PHEV	Electric Vehicle/Plug-in Hybrid Electric Vehicles
EVSE	Electric Vehicle Supply Equipment
FAN	Field Area Network

Acronyms/Abbreviations	Description
FCC	Federal Communications Commission
FCIR	Fault Clear Isolate Reconfiguration
FEP	Front End Processor
FERC	Federal Energy Regulatory Commission
FIPS	Federal Information Processing Standard Document
FLIR	Fault Location, Isolation, Restoration
G&T	Generations and Transmission
GAPP	Generally Accepted Privacy Principles.
GIS	Geographic Information System
GL	General Ledger
GPRS	General Packet Radio Service
HAN	Home Area Network
HMI	Human-Machine Interface
HV	High Voltage (in definition)
HVAC	Heating, Ventilating, and air conditioning (shown in figure)
I2G	Industry to Grid
IEC	International Electrotechnical Commission
IED	Intelligent Electronic Device
IHD	In-home Display
IPD	In Premise Display
ISA	International Society of Automation
ISO	Independent System Operator
ISO/IEC27001	International Organization for Standardization/International Electrotechnical Commission Standard 27001.
IT	Information Technology
IVR	Interactive Voice Response
LAN	Local Area Network
LIC	Logical Interface Control
LMS	Load management system
LMS/DRMS	Load Management System/ Distribution Resource Management System
LV	Low voltage (in definition)
MDMS	Meter Data Management System
MFR	Multi-Feeder Reconnection
MSW	Meter service switch
MV	Medium voltage (in definition)
NAN	Neighborhood Area Network
NERC	North American Electric Reliability Corporation
NIC	Network Interface Card
NIPP	National Infrastructure Protection Plan
NIST	National Institute of Standards and Technology
NISTIR	NIST Interagency Report
NMS	Network Management system

Acronyms/Abbreviations	Description
ODW	Operational Data Warehouse
OMS	Outage Management System
OPENSG	Open Smart Grid
ORM	Outage & Restoration Management
OWASP	Open Web Application Security Project
PAN	Premise Area Network - synonymous for HAN
PAP	Priority Action Plan
PCT	Programmable Communicating Thermostat
PEV	Plug-In Electric Vehicle
PI	Process Information
PIA	Privacy Impact Assessment. .
PII	Personally Identifying Information
R&D	Research and Development
REP	Retail Energy Provider
RTO	Regional Transmission Operator
RTP	Real Time Pricing
RTU	Remote Terminal Unit
SCADA	Supervisory Control and Data Acquisition
SCE	Southern California Edison
SGIP	Smart Grid Interoperability Panel
SGIP-CSWG	SGIP – Cyber Security Working Group
SP	Special Publication
SRS	System Requirements Specification
SSP	Sector-Specific Plans
T/FLA	Three/Four Letter Acronym
TOU	Time Of Use
TXT	Text Message or Messaging
UCAIug	Utility Communication Association International Users Group
VAR	Volt-Amperes Reactive
VEE	Validation Estimation & Editing
VIN	Vehicle Identification Number
VVC	Volt Var Control
VVWS	Volt-VAR-Watt System
WAMS	Wide-Area Measurement System
WAN	Wide Area Network
WASA	Wide Area Situational Awareness
WLAN	Wireless Local Area Network
WMS	Work Management System

8.2 Definitions

Term	Definition
Actor	A generic name for devices, systems, or programs that make decisions and exchange information necessary for performing applications: smart meters, solar generators, and control systems represent examples of devices and systems.
Aggregation	Practice of summarizing certain data and presenting it as a total without any PII identifiers
Aggregator	A mechanism for collecting like streams of data or metering for use as a single figures by upstream systems.
Applications	Tasks performed by one or more actors within a domain.
Asset Management System	A system(s) of record for assets managed in the Smart Grid. Management context may change(e.g. financial, network)
Bulk Generation	The generators of electricity in bulk quantities. May also store energy for later distribution (from NIST Smart Grid Framework and Roadmap).
Capacitor Bank	This is a device used to add reactive power as needed at strategic points in a distribution grid to better control and manage VARs and thus the Power Factor and they will also affect voltage levels.
Common Web Portal	Web interface for Regional Transmission Operator, customers, retail electric providers and transmission/distribution service provider to function as a clearing house for energy information. Commonly used in deregulated markets.
Customer	The end users of electricity. May also generate, store, and manage the use of energy. Traditionally, three customer types are discussed, each with its own domain: residential, commercial, and industrial (from NIST Smart Grid Framework and Roadmap).
Data Aggregation Point	This device is a logical actor that represents a transition in most AMI networks between Wide Area Networks and Neighborhood Area Networks. (e.g. Collector, Cell Relay, Base Station, Access Point, etc)
Demand Side Management	A system that co-ordinates demand response / load shedding messages indirectly to devices (e.g. Set point adjustment)
Distribution	The distributors of electricity to and from customers. May also store and generate electricity.
Distribution Management System	A system that monitors, manages and controls the electric distribution system.
Distribution Systems Demand Response	A system used to reduce electric distribution load during peak demand. Strictly used for Distribution systems only.
Domain	A high-level grouping of organizations, buildings, individuals, systems, devices, or other actors with similar objectives and relying on—or participating in— similar types of applications (from NIST Framework and Roadmap)
Electric Vehicle/Plug-in Hybrid Electric Vehicles	Cars or other vehicles that draw electricity from batteries to power an electric motor for vehicle propulsion. PHEVs also contain an internal combustion engine.
Energy Services Interface	Provides security and, often, coordination functions that enable secure interactions between relevant Home Area Network Devices and the Utility. Permits applications such as remote load control, monitoring and control of distributed generation, in-home display of customer usage, reading of non-energy meters, and integration with building management systems. Also provides auditing/logging functions that record transactions to and from Home Area Networking Devices.

Term	Definition
Enterprise Service Bus	The Enterprise Service Bus consists of a software architecture used to construct integration services for complex event-driven and standards-based messaging for data exchange. The ESB is not limited to a specific tool set, rather it is a defined set of integration services.
Fault Detector	A device used to sense a fault condition on an electrical circuit and can be used to provide a local and/or remote indication of the fault.
Field Force	Employee working in the service territory that may be working with Smart Grid devices.
Home Area Network	A network of energy management devices, digital consumer electronics, signal-controlled or enabled appliances, and applications within a home environment that is on the premise side of the electric meter. *In-premise communication system (OpenHAN 2.0)*
Last Gasp	Concept of an energized device within the Smart Grid detecting power loss and sending a broadcast message of the event prior to complete power loss.
Load Management System	System that controls load by sending messages directly to device (e.g. On/Off)
Low Voltage Sensor	A device used to measure and report electrical properties (such as voltage, current, phase angle or power factor, etc.) at a low voltage customer delivery point.
Markets	The operators and participants in electricity markets (from NIST Smart Grid Framework and Roadmap)
Medium Voltage Sensor	A device used to measure and report electrical properties (such as voltage, current, phase angle or power factor, etc.) on a medium voltage distribution line.
Motorized Switch	A load break device under remote control that can be used to open or close a circuit.
Neighborhood Area Network	A network comprised of all communicating components within a distribution domain.
Network Management System	A system that manages Fault, Configuration, Auditing/Accounting, Performance and Security of the communication network. This system is exclusive from the electrical network.
Operations	The managers of the movement of electricity (from NIST Smart Grid Framework and Roadmap).
Outage Management System	A system that receives ~~out~~ power system outage notifications and correlates the geographic location of the power outage
Personally Identifying Information	(PII) Information that reveals details, either explicitly or implicitly, about a specific individual's household dwelling or other type of premises. This is expanded beyond the normal "individual" component because there are serious privacy impacts for all individuals living in one dwelling or premise. This can include items such as energy use patterns or other types of activities. The pattern can become unique to a household or premises just as a fingerprint or DNA is unique to an individual.
Phase Measuring Unit	A device capable of measuring the phase of the voltage or current waveform relative to a reference.
Power Factor	A dimensionless quantity that relates to efficiency of the electrical delivery system for delivering real power to the load. Numerically, it is the Cosine of the phase angle between the voltage and current waveforms. The closer the power factor is to unity the better the inductive and capacitive elements of the circuit are balanced and the more efficient the system is for delivering real power to the load(s).
Privacy Impact Assessment	A process used to evaluate the possible privacy risks to Personally Identifying Information, in all forms, collected, transmitted, shared, stored, disposed of, and accessed in any other way, along with the mitigation of those risks at the beginning of and throughout the life cycle of the associated process, program or system
Programmable Communicating Thermostat	A device within the premises that has communication capabilities and controls heating, ventilation and cooling systems.

Term	Definition
Recloser (non-Team)	A device used to sense fault conditions on a distribution line and trip open to provide protection. It is typically programmed to automatically close (re-close) after a period of time to test if the fault has cleared. After several attempts of reclosing it can be programmed to trip open and stop trying to reclose until reset either locally or under remote control.
Recloser (Team)	A device that can sense fault conditions on a distribution line and to communicate with other related reclosers (the team) to sectionalize the fault and provide a coordinated open/close arrangement to localize the effect of the fault.
Regional Transmission Operator	A Regional Transmission Organization (RTO) is an organization that is established with the purpose of promoting efficiency and reliability in the operation and planning of the electric transmission grid and ensuring non-discrimination in the provision of electric transmission services based on specific required/demonstrable characteristics and functions.
Remote Terminal Unit	Aggregator of multiple serialized devices to a common telecommunications interface
Service Providers	The organizations providing services to electrical customers and utilities (from NIST Smart Grid Framework and Roadmap).
Sub Meter	Premise based meter used for Distributed Energy Resources and PHEV installed downline from the utility's meter. This device may be revenue grade.
Substation Controller	Distributed processing device that has supervisory control or coordinates information exchanges from devices within a substation from a head end system.
Transformer (MV-to-LV)	A standard point of delivery transformer. In the Smart Grid context is it assumed there will be a need to measure some electrical or physical characteristics of this transformer such as voltage (high and/or low side) current, MV load, temperature, etc.
Transmission	The carriers of bulk electricity over long distances. May also store and generate electricity.
Use Case	Use cases are a systems engineering tool for defining a system's behavior from the perspective of users. In effect, a use case is a story told in structure and detailed steps—scenarios for specifying required usages of a system, including how a component, subsystem, or system should respond to a request that originates elsewhere.
Voltage Regulator	This device is in effect an adjustable ratio transformer positioned at strategic points in a distribution grid and is utilized to better manage and control the voltage as it changes along the distribution feeder.
VAR – Volt-Amperes Reactive;	In an AC power system the voltage and current measured at a point along the delivery system will often be out of phase with each other as a result the combined effects of the resistive and reactive (i.e. the capacitance and inductive) characteristics of the delivery system components and the load. The phase angle difference at a point along the delivery system is an indication of how well the inductive and capacitive effects are balanced at that point. The real power passing that point is the product of the magnitude of the Voltage and Current and the Cosine of the angle between the two. The VAR parameter is the product of the magnitude of the Voltage and Current and the Sine of the angle between the two. The magnitude of the VAR parameter is an indication of the phase imbalance between the voltage and current waveforms.
Web Portal	Interface between energy customers and the system provider. Could be the utility or third party