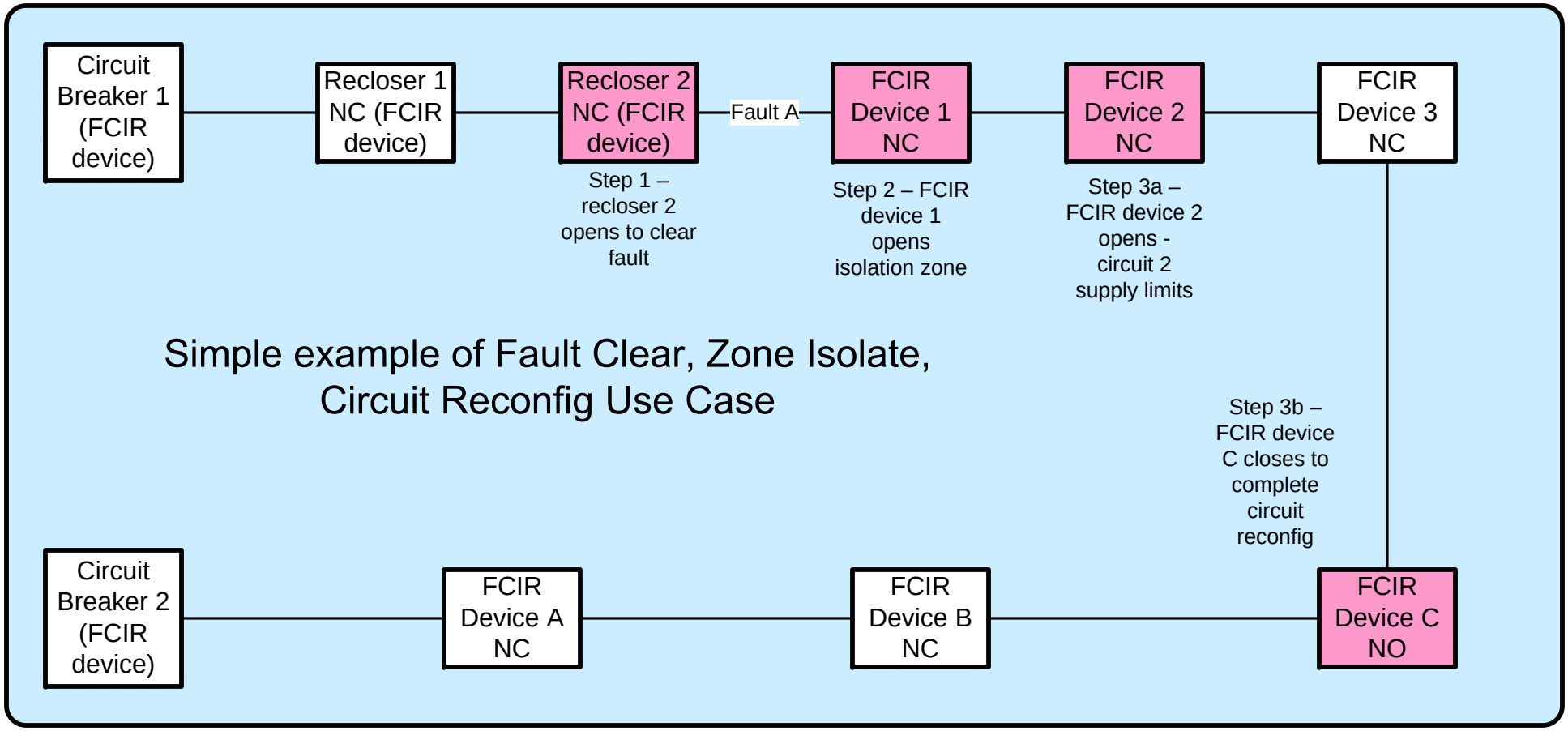
Circuit Breaker 1 (FCIR device)
Recloser 1 NC (FCIR device)
Recloser 2 NC (FCIR device)
Fault A
FCIR Device 1 NC
FCIR Device 2 NC
FCIR Device 3 NC
Step 1 – recloser 2 opens to clear fault
Step 2 – FCIR device 1 opens isolation zone
Step 3a – FCIR device 2 opens - circuit 2 supply limits
Simple example of Fault Clear, Zone Isolate, Circuit Reconfig Use Case
Step 3b – FCIR device C closes to complete circuit reconfig
Circuit Breaker 2 (FCIR device)
FCIR Device A NC
FCIR Device B NC
FCIR Device C NO